Installation, Use and Maintenance Manual

DR FAMILY

Rev 07

FW ≥ 2.009

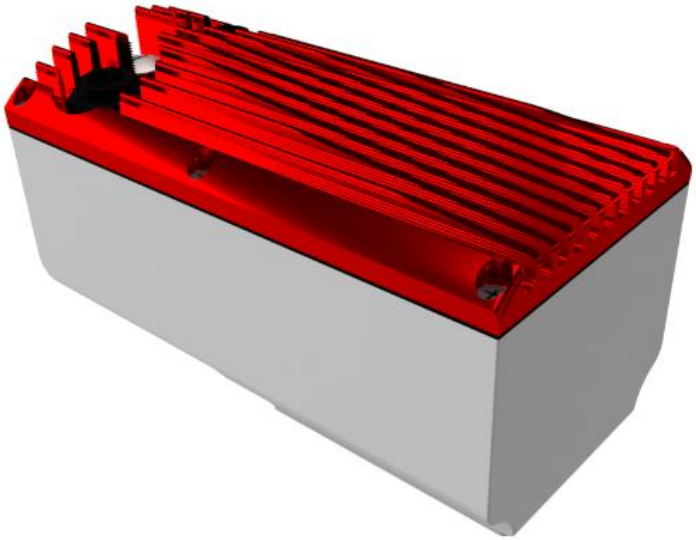

Table of contents

1 General information 5

1.1 Introduction 5

1.2 Safety warnings 5

1.3 Storage and Installation Environment 5

1.4 Transport, installation and wiring 5

1.5 Operation and adjustments 6

1.6 Maintenance and inspection 6

1.7 Product checks 7

1.8 Label Checks 7

1.8.1 DR/DR-BUS 7
1.8.2 DR NEARBY/DR-BUS NEARBY 8
1.9 Product technical specification 9

2 Installation 13

2.1 Dimensions 13

2.1.1 DR 13
2.1.2 DR-BUS 14
2.1.3 DR NEARBY 15
2.1.4 DR-BUS NEARBY 15
2.2 Electric connections 16

2.2.1 Power supply connector CN1 16
2.2.2 I/O connector CN2 16
2.2.3 USB service connector CN4 17
2.2.4 Terminal (DR NREABY and DR-BUS NEARBY) 17
2.2.5 Fieldbus connection (DR-BUS) 17
2.3 Protective device installation 19

3 Parametrization interface 20

3.1 Software installation 20

3.2 Software 21

3.2.1 Status 22
3.2.2 Alarm list 23
3.2.3 Parameter 23
3.2.4 Monitoring 24
4 Parameters 25

4.1 Appl 25

4.1.1 User 25
4.1.2 Input Output 26
4.1.3 Fieldbus 27
4.2 Motor 28

4.3 System 29

4.4 Alarm 29
4.5 PressLimit 29
5 LED status 30
5.1 Fieldbus Board EtherCAT 30
5.2 Fieldbus Board Ethernet IP 32
5.3 Fieldbus Board Ethernet PowerLink 35
5.4 Fieldbus Board Ethernet ProfiNet IO 37
6 Alarm 38
7 Motor Parametrization for DR NEARBY and DR-BUS NEARBY 39
7.1 Autotuning 39
7.1.1 BSI 39
7.1.2 Fieldbus 40
8 EtherCAT / PowerLink 41
8.1 Overview 41
8.2 Object dictionary 41
8.2.1 Communication area 41
8.2.2 Manufacturer parameter area 42
8.2.3 Manufacturer specific area 43
8.2.4 Profiled objects 44
8.3 CiA402 – Frequency converter 45
8.3.1 Supported modes 45
8.4 Default PDO mapping (Only Ethercat) 49
8.5 EMCY codes 49
9 Ethernet IP 51
9.1 Overview 51
9.2 CIP Objects 51
9.2.1 COM object – 0x64 52
9.2.2 PAR object – 0x65 52
9.2.3 MISC object – 0x66 53
9.2.4 CIA402 object – 0x67 53
9.3 Process data 55
10 ProfiNET 56
10.1 Overview 56
10.2 Device identity 56
10.3 Process data 56
11 Warranty Conditions 57
12 Disclaimer 58

1 General information

1.1 Introduction

Thank you for choosing this product. This document is an integral part of the product, as it contains the procedures and parameters necessary for the assembly, installation, wiring, commissioning and support of the product.

The purchaser and/or qualified person with knowledge of electrical and/or electronic systems who will be using the product must be in possession of the use and maintenance manual and must keep it available for reference at any moment.

1.2 Safety warnings

Follow the precautions given (with warning symbols) closely, as they are crucial for safety:

⚠ General danger symbol

⚠ Hazardous electrical voltage symbol

1.3 Storage and Installation Environment

Do not store or use the product in the following environments:

- ⚠ Exposed to direct sunlight
- ⚠ Exposed to temperature, condensation and relative humidity levels higher than those indicated in the specifications table
- ⚠ Exposed to dust, salinity, water, oil, chemicals, corrosive or inflammable gases or fuels
- ⚠ In environments with pollution degree higher than 2
- ⚠ When subject to impact or vibrations

1.4 Transport, installation and wiring

- ⚠ Do not drop the product;
- ⚠ Grasp the product by the motor, always checking first to ensure it is not hot – burn hazard;
- ⚠ Do not install the product if there are signs of damage to the packaging or the product itself;
- ⚠ Wiring must be performed by qualified personnel, with the power supply disconnected;
- ⚠ During the installation and wiring operations, protect any product openings with appropriate guards so that no conductive metallic objects of any kind are able to get in;
- ⚠ Ensure the connectors are firmly tightened;
- ⚠ Install appropriate safety components (fused disconnect switch) up line of the power supply;
- ⚠ Use shielded cables in locations subject to static electricity, strong magnetic fields or in the presence of electrical lines;

- ⚠ Use suitable and appropriately sized cables for connection of the power supply, motor and control signals connections;
- ⚠ For control signal connections longer than 1m, it is recommended to use shielded cables with the shielding connected to an available earth signal;
- ⚠ Make sure that the power supply voltage complies with the one on the rating plate;
- ⚠ Ensure that there is sufficient ventilation to dissipate the heat produced by the product.

1.5 Operation and adjustments

- ⚠ Operate the product only subject to checks on the compatibility of the load and the machine in which it will be installed;
- ⚠ Do not approach the machine when the product is configured with the reset on error function, as the machine could restart suddenly after a stop caused by an error;
- ⚠ Do not place body parts near the rotating parts;
- ⚠ Use appropriate personal protective equipment during machining close to the axis ends (presence of sharp edges in the tongue seat);
- ⚠ Before performing the machine test, provide adequate protections around the rotating parts (joints, etc.);
- ⚠ Never operate the device or its switches with wet hands

1.6 Maintenance and inspection

- ⚠ Ensure that all safety precautions have been taken before performing maintenance or inspection operations
- ⚠ Do not touch the heatsink and the motor as these components heat up when the product is operational and remain hot even after it is switched off
- ⚠ Do not uninstall the product when it is powered, switch it off then wait at least two minutes before doing so
- ⚠ Do not change the wiring, the supply voltages, etc. while the product is powered
- ⚠ Do not repair or modify the product
- ⚠ The product does not require any particular preventive maintenance. However, we recommend performing the following checks regularly:
    - Check the condition and tightening of the connections
    - Check that the heatsink is clean and ventilated
- Do not treat the product as normal domestic waste: it must be taken to an appropriate collection point for electrical and electronic waste. Failure to observe this requirement can lead to civil and/or criminal penalties, and could have damaging consequences for the environment and human health.

1.7 Product checks

Upon delivery of the product, we recommend checking that it corresponds to that ordered and is complete. Keep in mind that only the connectors to wire the device (power, signals and bus) are included in the package. Contact the supplier's technical support (support@minimotor.com) for any problems relating to the product.

1.8 Label Checks

Example of label applied to the product:

1.8.1 DR/DR-BUS

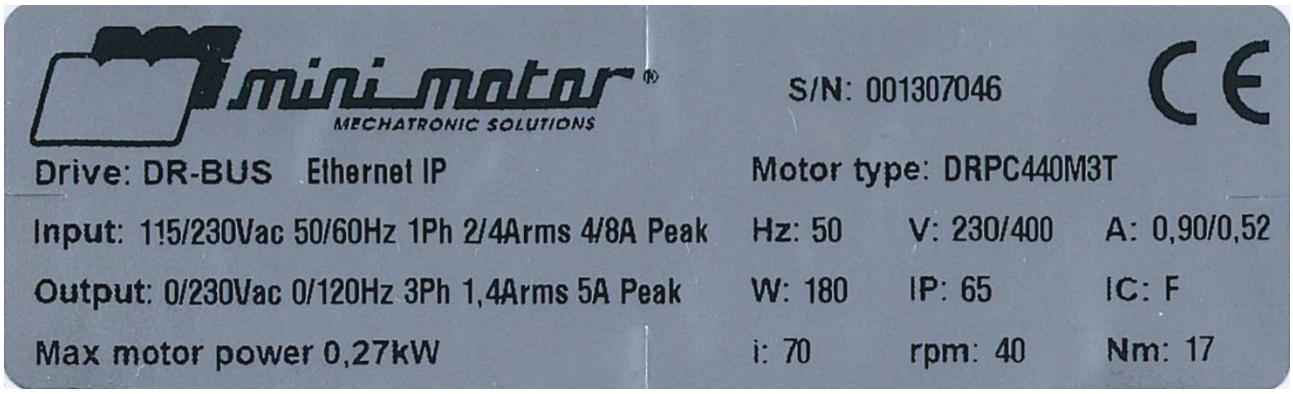

Figure 1

S/N	Serial number
Drive	Product name: -DR -DR-BUS / ETH (Ethercut) / EPL (Powerlink) / EPN (Profinet) / EIP (Ethernet IP)
Input	Supply Voltage
Output	Output Voltage
Max Motor Power	Maximal motor power
Motor	Gearmotor name
Hz	Motor rated frequency
V	Motor rated voltage [Vac]
A	Nominal current
W	Motor rated power
IP	Ingress protection (IP rating)
IC	Motor appliance (isolation) class
Ratio	Reduction gear reduction ratio
Rpm	Reduction gear output speed
Nm	Reduction gear output torque

Table 1

1.8.2 DR NEARBY/DR-BUS NEARBY

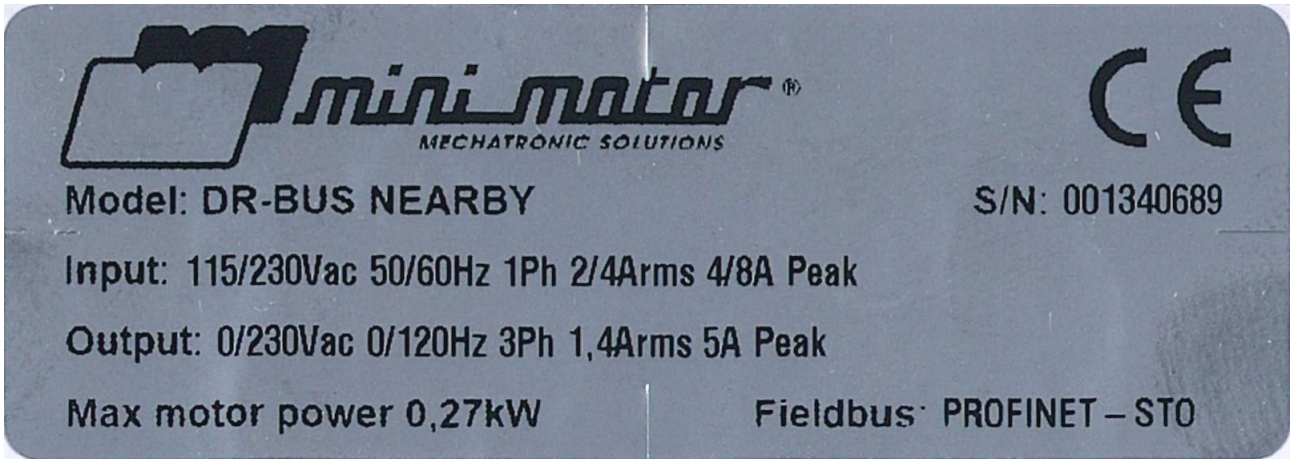

Figure 2

S/N	Serial number
Drive	Product name: -DR -DR-BUS / ETH (Ethercut) / EPL (Powerlink) / EPN (Profinet) / EIP (Ethernet IP)
Input	Supply Voltage
Output	Output Voltage
Max Motor Power	Maximal motor power
Fieldbus	Communication protocol

Table 2

1.9 Product technical specification

Technical datasheet		
	DR – DR-BUS – DR NEARBY – DR-BUS NEARBY	
Rated Power Supply	115V 50/60 Hz 1Ø	230V 50/60 Hz 1Ø
Max Nominal Current	4.6 Arms	3.6 Arms
Driver Output	0 – 230V 0-150Hz 1.4 Arms	
Nominal Overload	200% for 60 seconds	
PWM Frequency	4/8/12 kHz	
Motor control algorithm	V/F and FoC	
Brake (optional)	24Vdc max. 0.5A	
Operating mode	Speed control	
Digital input	4 pnp (24Vdc IEC 61131-2 max 7kHz) of wich 2 settable as STO (Optional only on request)	
Analog input	[0 ÷ 10]Vdc [-10 ÷ +10]Vdc [4 ÷ 20]mA – Optional on request	
Output	1 NO 2A 125Vac/60Vdc	
Service communication	USB	
Optional Fieldbus (DR-BUS)	Ethercat (ETH) Ethernet IP (EIP) PowerLink (EPL) Profinet (EPN)	
Protection function (main)	Polarity reversal, overcurrent, overvoltage, under-voltage, overheating, overload, memory error, communication error	
Cooling	Natural	
Standard protection	IP65	
Use	[0÷40] °C	
Installation environment	Pollution class 3[1] Free from direct sunlight, vibrations, dust, corrosive or inflammable gases, oil vapour, fogs, water and humidity with or without a high salinity level	
Humidity	[20 - 90]% RH (not condensing - not corrosive)	
Installation Altirude	Maximum altitude 1000m asl	
Storage Temperature	[-20÷60]°C (transient temperatures during transport only)	
Compliance	CE, complies with EMC directive 2008/104/CE[1]	

Table 3

[1] Class C3, installation in second environment category.

Technical datasheet	
	DRH – DRH-BUS – DRH NEARBY – DRH-BUS NEARBY
Rated Power Supply	230V 50/60 Hz 1Ø
Max Nominal Current	6.8 Arms
Driver Output	0 – 230V 0-150Hz 2.85 Arms
Nominal Overload	200% for 60 seconds
PWM Frequency	4/8/12 kHz
Motor control algorithm	V/F and FoC
Brake (optional)	24Vdc max. 0.5A
Operating mode	Speed control
Digital input	4 pnp (24Vdc IEC 61131-2 max 7kHz) of wich 2 settable as STO (Optional only on request)
Analog input	[0 ÷ 10]Vdc [-10 ÷ +10]Vdc [4 ÷ 20]mA – Optional on request
Output	1 NO 2A 125Vac/60Vdc
Service communication	USB
Optional Fieldbus (DR-BUS)	Ethercat (ETH) Ethernet IP (EIP) PowerLink (EPL) Profinet (EPN)
Protection function (main)	Polarity reversal, overcurrent, overvoltage, under-voltage, overheating, overload, memory error, communication error
Cooling	Natural
Standard protection	IP65
Use	[0÷40] °C
Installation environment	Pollution class 3[1] Free from direct sunlight, vibrations, dust, corrosive or inflammable gases, oil vapour, fogs, water and humidity with or without a high salinity level
Humidity	[20 - 90]% RH (not condensing - not corrosive)
Installation Altirude	Maximum altitude 1000m asl
Storage Temperature	[-20÷60]°C (transient temperatures during transport only)
Compliance	CE, complies with EMC directive 2008/104/CE[2]

[2] Class C3, installation in second environment category.

Technical datasheet	
	DRF – DRF BUS – DRF NEARBY – DRF-BUS NERABY
Rated Power Supply	230V 50/60 Hz 1Ø
Max Nominal Current	1.7 Arms
Drive Output	0 – 230V 0-150Hz 0.65 Arms
Nominal Overload	200% for 60 seconds
PWM Frequency	4/8/12 kHz
Motor control algorithm	V/F and FoC
Brake (optional)	24Vdc max. 0.5A
Operating mode	Speed control
Digital input	4 pnp (24Vdc IEC 61131-2 max 7kHz) of wich 2 settable as STO (Optional only on request)
Analog input	[0 ÷ 10]Vdc [-10 ÷ +10]Vdc [4 ÷ 20]mA – Optional on request
Output	1 NO 2A 125Vac/60Vdc
Service communication	USB
Optional Fieldbus (DF-BUS)	Ethercat (ETH) Ethernet IP (EIP) PowerLink (EPL) Profinet (EPN)
Protection function (main)	Polarity reversal, overcurrent, overvoltage, under-voltage, overheating, overload, memory error, communication error
Cooling	Natural
Standard protection	IP67
Use	[0÷40] °C
Installation environment	Pollution class 3[1] Free from direct sunlight, vibrations, dust, corrosive or inflammable gases, oil vapour, fogs, water and humidity with or without a high salinity level
Humidity	[20 - 90]% RH (not condensing - not corrosive)
Installation Altirude	Maximum altitude 1000m asl
Storage Temperature	[-20÷60]°C (transient temperatures during transport only)
Compliance	CE, complies with EMC directive 2008/104/CE[3]

[3] Class C3, installation in second environment category.

Technical datasheet	
	DRHF – DRHF-BUS - DRHF NEARBY – DRHF-BUS NEARBY
Rated Power Supply	230V 50/60 Hz 1Ø
Max Nominal Current	3.2 Arms
Driver Output	0 – 230V 0-150Hz 1.65 Arms
Nominal Overload	200% for 60 seconds
PWM Frequency	4/8/12 kHz
Motor control algorithm	V/F and FoC
Brake (optional)	24Vdc max. 0.5A
Operating mode	Speed control
Digital input	4 pnp (24Vdc IEC 61131-2 max 7kHz) of wich 2 settable as STO (Optional only on request)
Analog input	[0 ÷ 10]Vdc [-10 ÷ +10]Vdc [4 ÷ 20]mA – Optional on request
Output	1 NO 2A 125Vac/60Vdc
Service communication	USB
Optional Fieldbus (DR-BUS)	Ethercat (ETH) Ethernet IP (EIP) PowerLink (EPL) Profinet (EPN)
Protection function (main)	Polarity reversal, overcurrent, overvoltage, under-voltage, overheating, overload, memory error, communication error
Cooling	Natural
Standard protection	IP67
Use	[0÷40] °C
Installation environment	Pollution class 3[1] Free from direct sunlight, vibrations, dust, corrosive or inflammable gases, oil vapour, fogs, water and humidity with or without a high salinity level
Humidity	[20 - 90]% RH (not condensing - not corrosive)
Installation Altirude	Maximum altitude 1000m asl
Storage Temperature	[-20÷60]°C (transient temperatures during transport only)
Compliance	CE, complies with EMC directive 2008/104/CE[4]

[4] Class C3, installation in second environment category.

2 Installation

2.1 Dimensions

2.1.1 DR

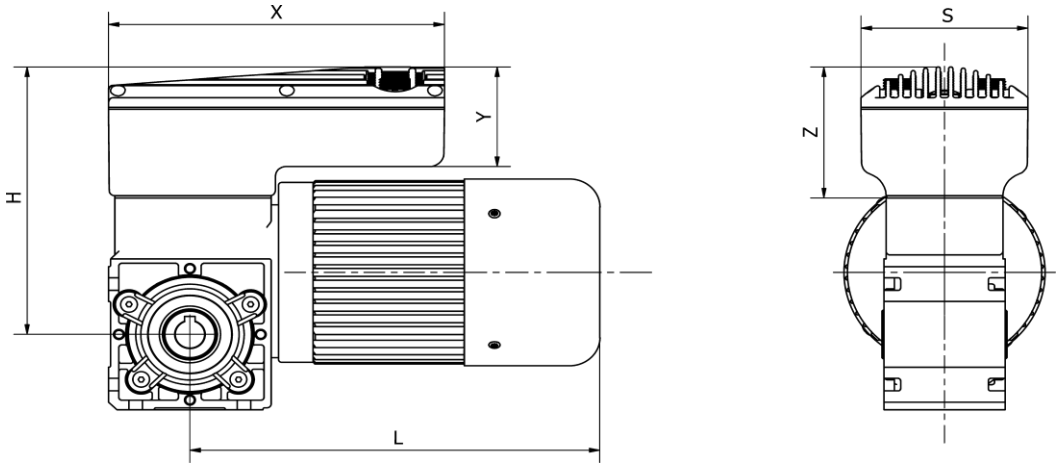

TYPE	H	L	S	X	Y	Z
MC...P	127	163	80	161	52	68
MC...P2	127	183	80	161	52	68
MC...P3	127	221	80	161	52	68
PC...M3	139	197	80	161	52	68
PC...M4	139	227	80	161	52	68

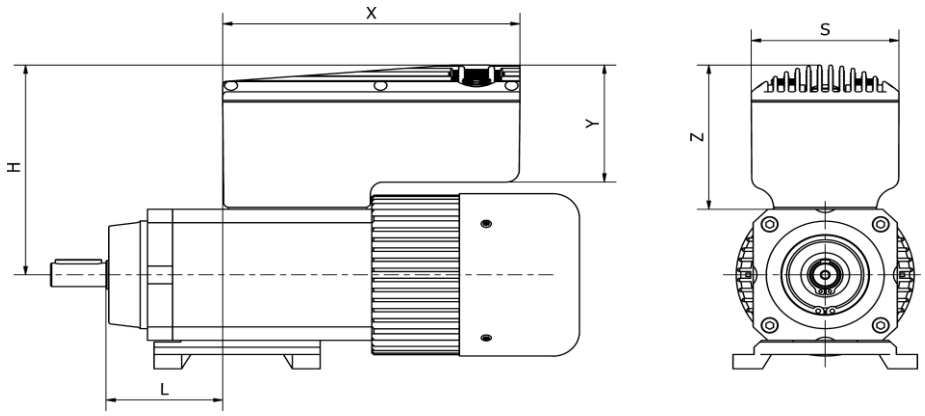

TYPE	H	L	S	X	Y	Z
AC...	113	23	80	161	68	86
AC...P	113	23	80	161	68	86
AC...P2	113	23	80	161	68	86
PA...M2	124	63	80	161	68	86
PA...M3	124	63	80	161	68	86

2.1.2 DR-BUS

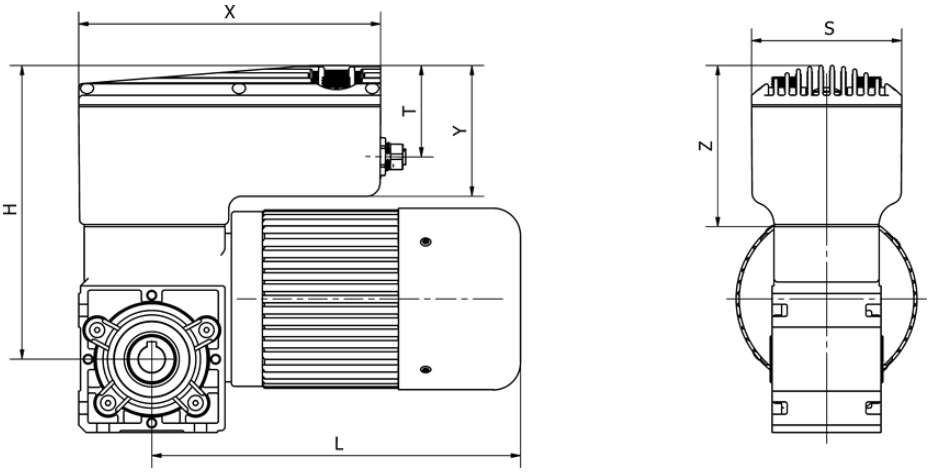

Tipo	H	L	S	X	Y	Z
MC...P	145	163	80	49	161	70
MC...P2	145	183	80	49	161	70
MC...P3	145	221	80	49	161	70
PC...M3	157	197	80	49	161	70
PC...M4	157	227	80	49	161	70

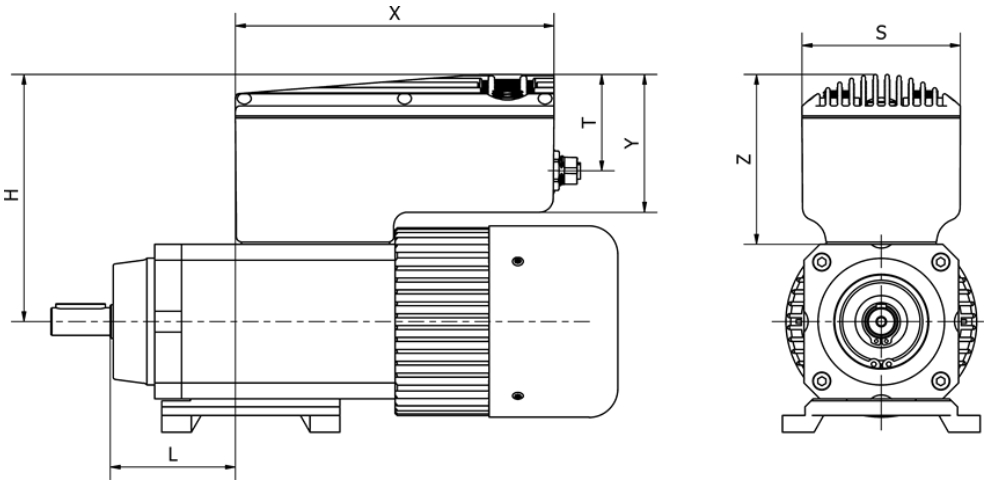

Tipo	H	L	S	X	Y	Z
AC...	113	23	80	49	161	68
AC...P	113	23	80	49	161	68
AC...P2	113	23	80	49	161	68
PA...M2	124	63	80	49	161	68
PA...M3	124	63	80	49	161	68

2.1.3 DR NEARBY

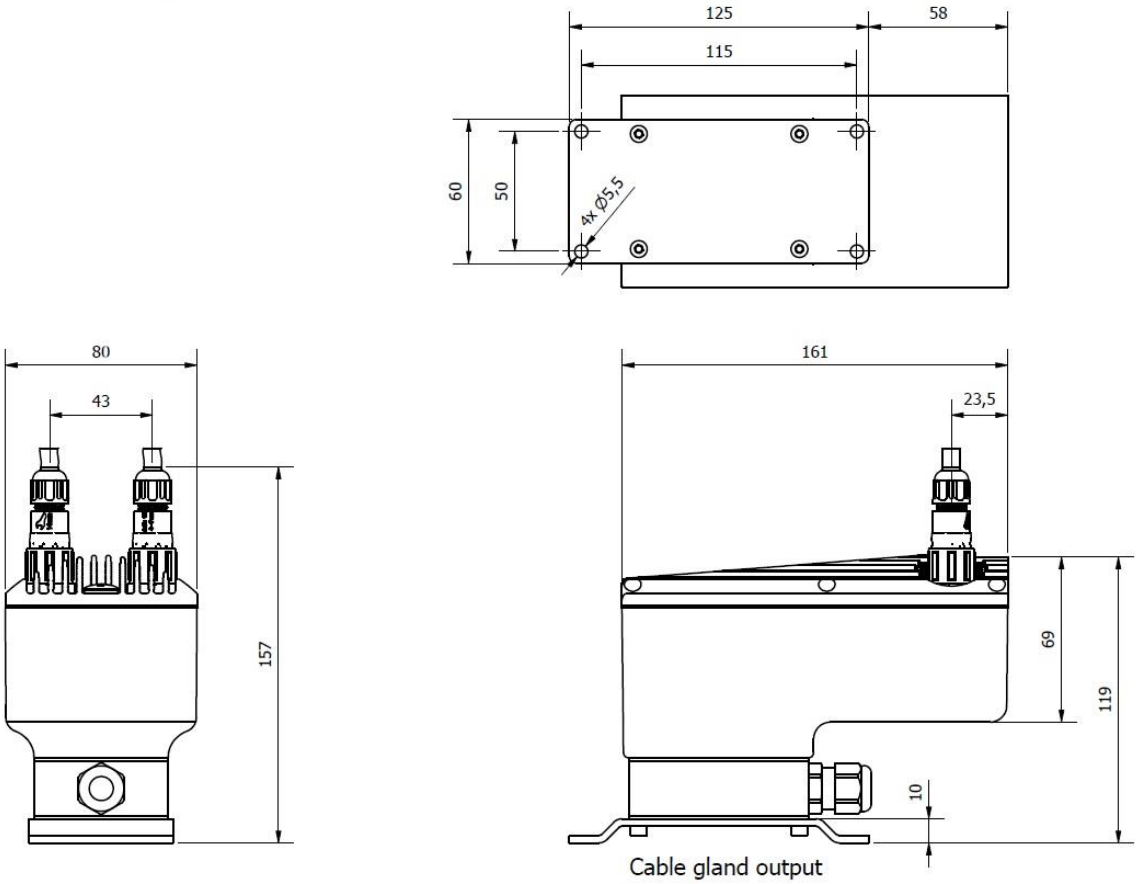

2.1.4 DR-BUS NEARBY

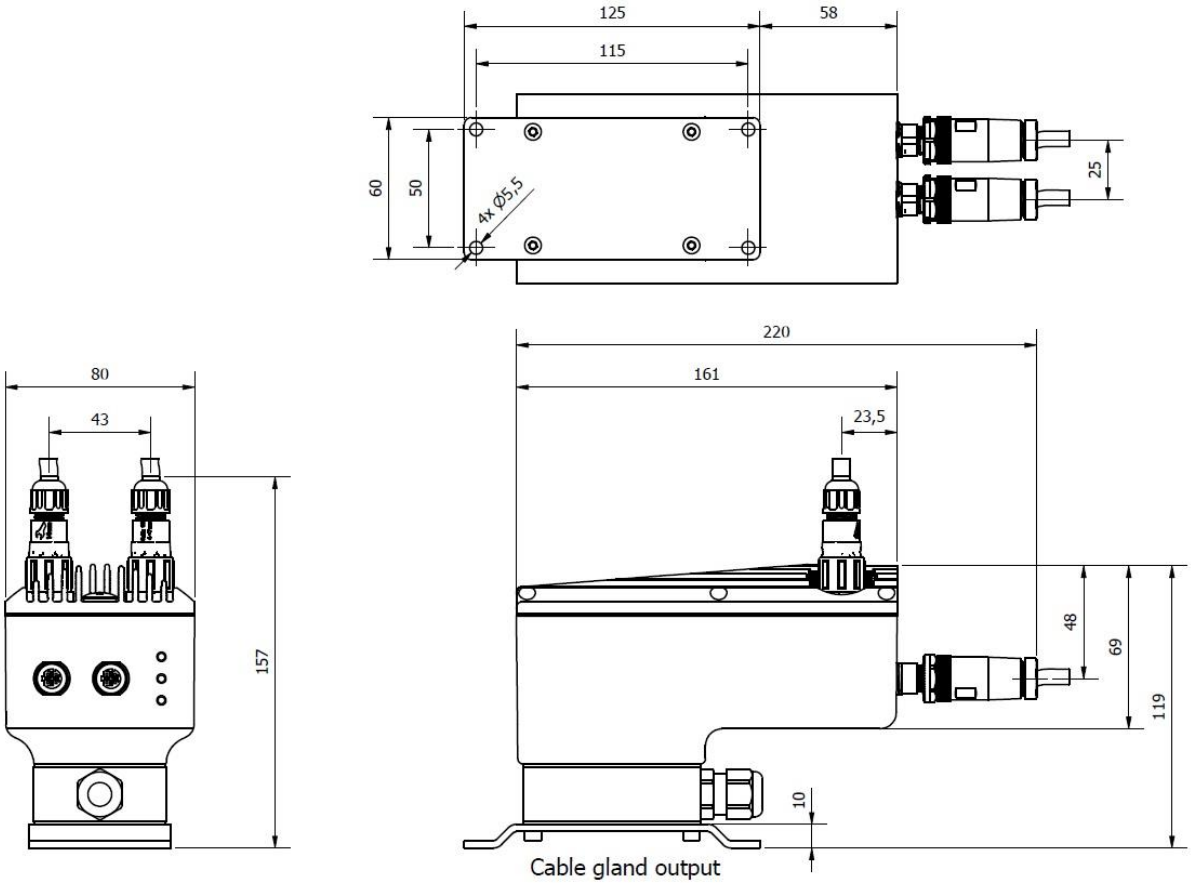

2.2 Electric connections

Please note that the device power supply does not have a direct connection with the system earth.

2.2.1 Power supply connector CN1

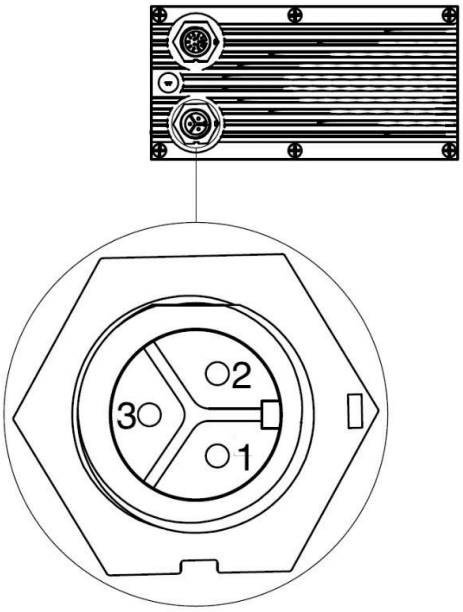

Figure 3

CN1		
Pin	**ID**	**Descrizione**
1	L	Line
2	PE	Ground
3	N	Neutre

Awg 18 cable is recommended for power connection.

WARNING: the picture represents the top view of the connector fixed on the motor case.

2.2.2 I/O connector CN2

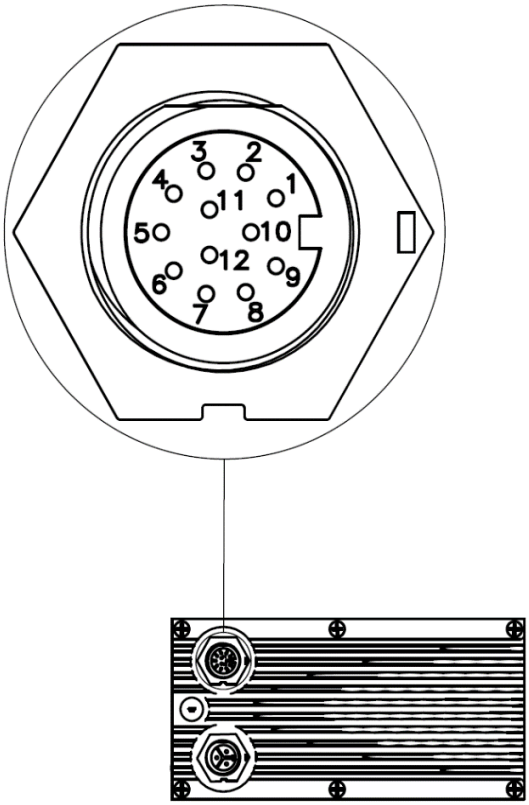

Figure 4

Use a shield cable Awg 22 for control connection

CN2			
Pin	**ID**	**Descrizione**	
1	+24Vdc	Logic auxiliary power supply	
2	DIN 1	Digital inputs multifunction 24Vdc pnp max 7kHz	
3	DIN 2		
4	DIN 4 / S1+	Digital inputs multifunction 24Vdc pnp max 7kHz	*STO Input 1
5	DIN 5 / S2+		*STO Input 2
6	DIN GND	Ground for digital inputs	
7	AIN +	Positive analog signal input	
8	AIN -	Negative analog signal input	
9	AGND	Ground for analog inputs	
10	+10Vdc	Service power for analog input max 5mA	
11	Com	Relay common digital output	
12	NO	NO contact relay digital output max 2A	

***STO optional on request**

2.2.3 USB service connector CN4

Unscrew the metal cap to access the connector shown in Figure 5.

By using this micro USB connection, it is possible to set the device trough the specific BSI software.

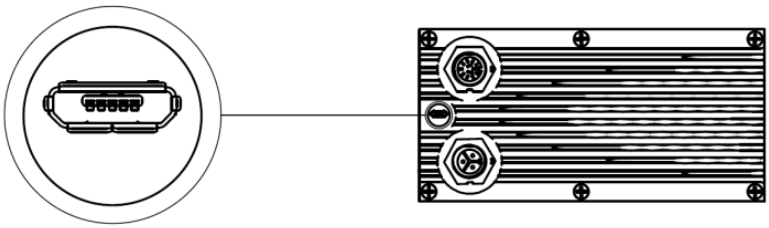

Figure 5

⚠ The USB cable must be connected to the DBS system only with the drive powered up

2.2.4 Terminal (DR NREABY and DR-BUS NEARBY)

To access the internal terminal connection, unscrew the four screws on the underside of the DR NEARBY. The DR NEARBY is already connected, the end user only has to take care of the external connection..

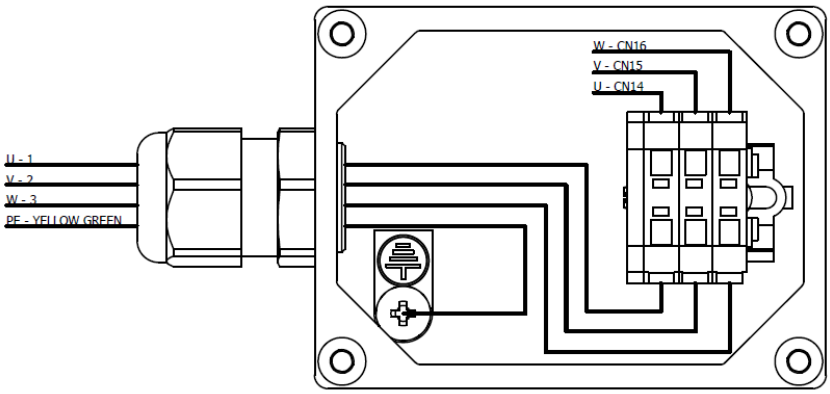

Figure 6

2.2.5 Fieldbus connection (DR-BUS)

The optional available fieldbus are:

- Ethercat defined by “ETH” in the final part of the product name;
- Ethernet IP defined by “EIP” in the final part of the product name;
- Powerlink defined by “EPL” in the final part of the product name;
- Profinet defined by “EPN” in the final part of the product name.

2.2.5.1 CanOPEN over EtherCAT (DR-BUS/ETH)

The wirings and LEDs in Figure 11 refer to the CanOpen over EtherCAT equipped version.

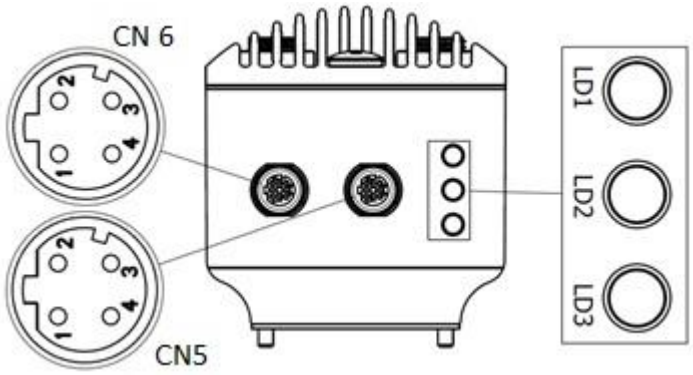

Figure 7

The pin function is the same for CN5 and CN6.
CN5 connector --- input
CN6 connector --- output

Pin	CanOpen over EtherCAT
1	TX+
2	RX+
3	TX-
4	RX-

Details about Led status are explained on chapter 5.1

2.2.5.2 Ethernet IP (DR-BUS/EIP)

The wirings and LEDs in Figure 12 refer to the Ethernet IP equipped version.

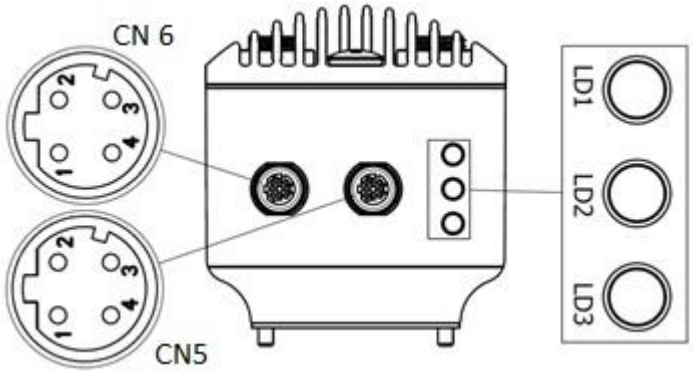

Figure 8

The pin function is the same for CN5 and CN6.
Connector CN5 = Connector CN6 = SWITCH

Pin	Ethernet IP
1	TX+
2	RX+
3	TX-
4	RX-

Details about Led status are explained on chapter 5.2

2.2.5.3 Powerlink (DR-BUS/EPL)

The wirings and LEDs in Figure 12 refer to the Powerlink equipped version.

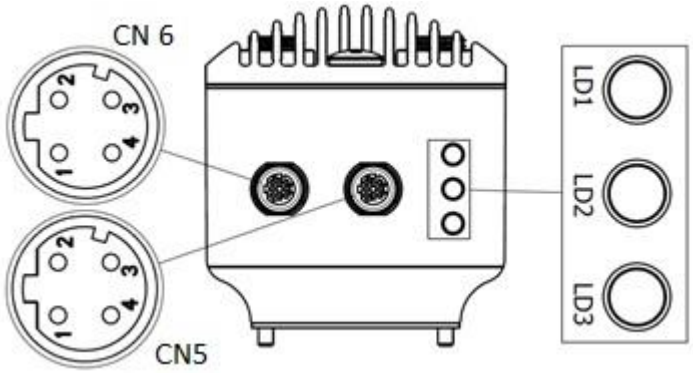

Figure 9

The pin function is the same for CN5 and CN6.
Connector CN5 = Port A
Connector CN6 = Port B

Pin	Powerlink
1	TX+
2	RX+
3	TX-
4	RX-

Details about Led status are explained on chapter 5.3

2.2.5.4 Profinet (DR-BUS/EPN)

The wirings and LEDs in Figure 12 refer to the Profinet equipped version.

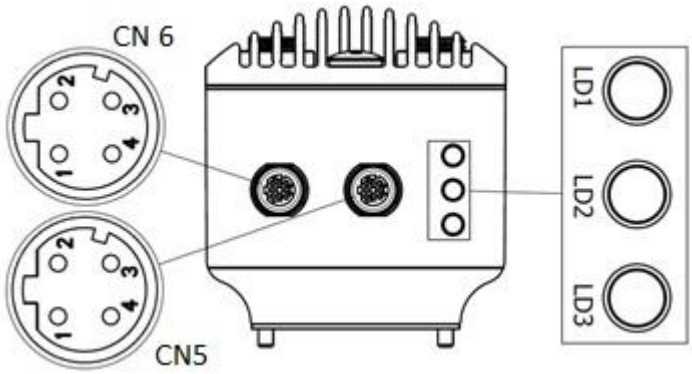

Figure 10

The pin function is the same for CN5 and CN6.
Connector CN5 = Port A
Connector CN6 = Port B

Pin	Profinet
1	TX+
2	RX+
3	TX-
4	RX-

Details about Led status are explained on chapter 5.4

2.3 Protective device installation

In order to prevent short circuits, the product must be connected to a power-supply line protected by devices to protect against overcurrent and short circuits, in compliance with electrical safety legislation, using standard fused, disconnect switches, etc.

For the installation of a switch up line of the power supply connection, we suggest to use isolating switch with slow blow fuse 10A.

3 Parametrization interface

3.1 Software installation

1 Download the “BSI software” e “BSI Usb Driver“ from the web site http://www.minimotor.com

2 Extract and run the downloaded files. Follow the installation guide procedure until it is finished.

After the download extract the .zip file and run BSI.exe inside the folder (Figure 11).
WARNING: this is not an installation file. It directly runs the interface software, so you do not need to install it. Cause of this, every time the user wants to use the software only need to double click on this icon.

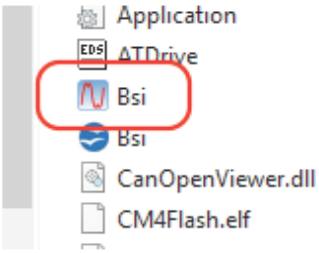

Figure 11

3 Connect the device trough the micro USB to the pc and check that the logic is connected to the power.

4 Once the program is run and the device is found, select CONNECT and wait for the complete loading (Figure 12).

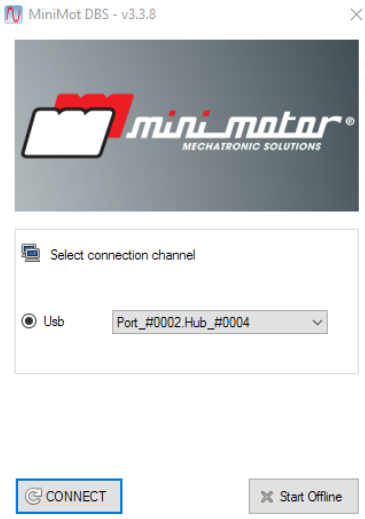

Figure 12

5 If the firmware stored in the device is no up to the screen Figure 12 appears. Select UPDATE to store the last version of the firmware.
Wait for the process to be completed and then click on CLOSE.

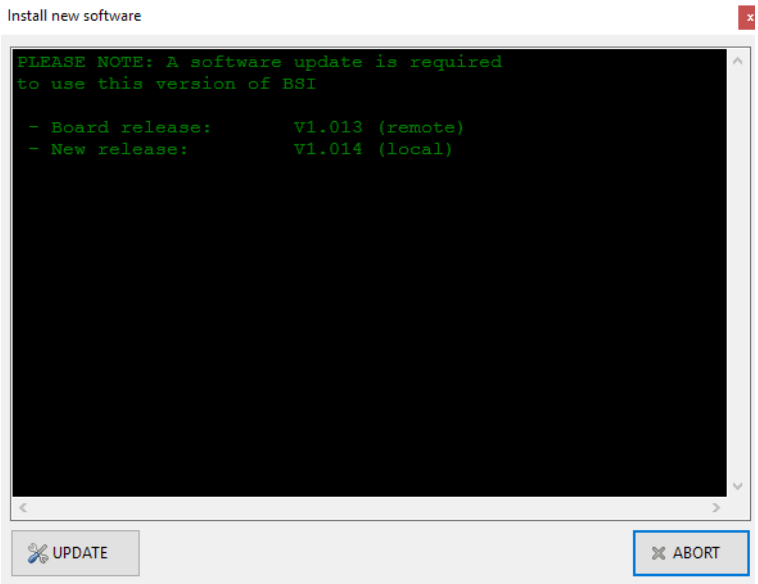

Figure 13

3.2 Software

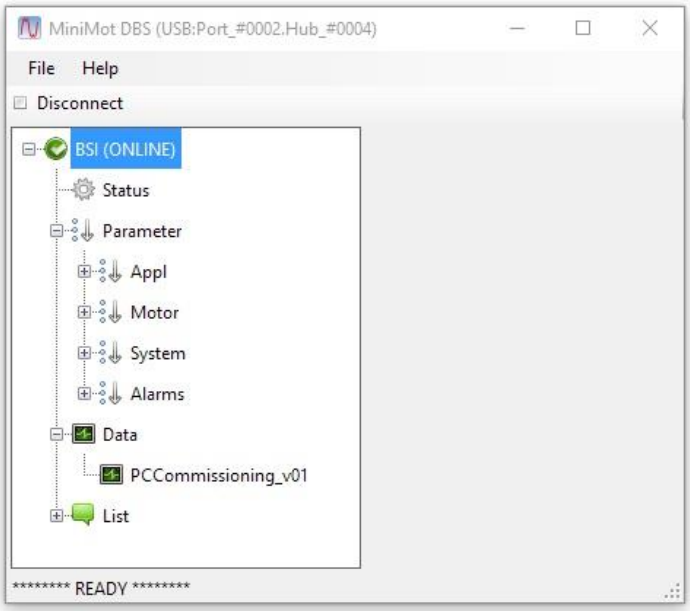

Figure 14

The Figure 14 rapresents the main screen of BSI software.
Following the menu it is possible to act on the motor parameter and to monitor the functional settings.

3.2.1 Status

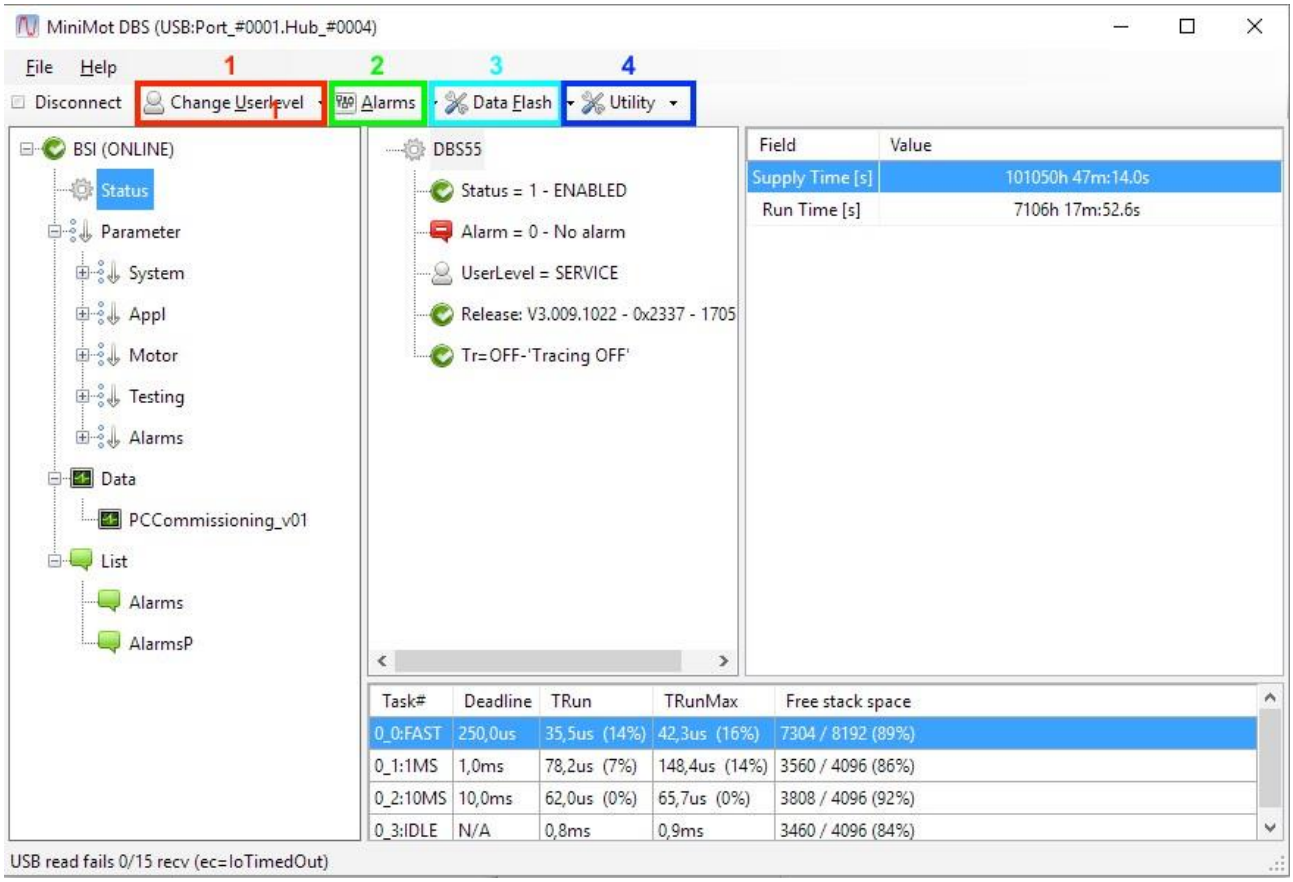

Figure 15

Click on “Status” in order to know the motor status, manage the presence of fault and change the software user level.

1 “Change User Level”: use this option in order to change the software user level and have acces to more setting parameters.

User	Free acces
Advance	Free acces
Eol	PW needed
Service	PW needed

2 “Alarms”: this button gives acces to the alarm menu:

Clear alarms	Reset the alarm situation

3 “Data Flash”: diagnostic tool to save the Flash memory image.;

4 “Utility”: Diagnostic tool.

3.2.2 Alarm list

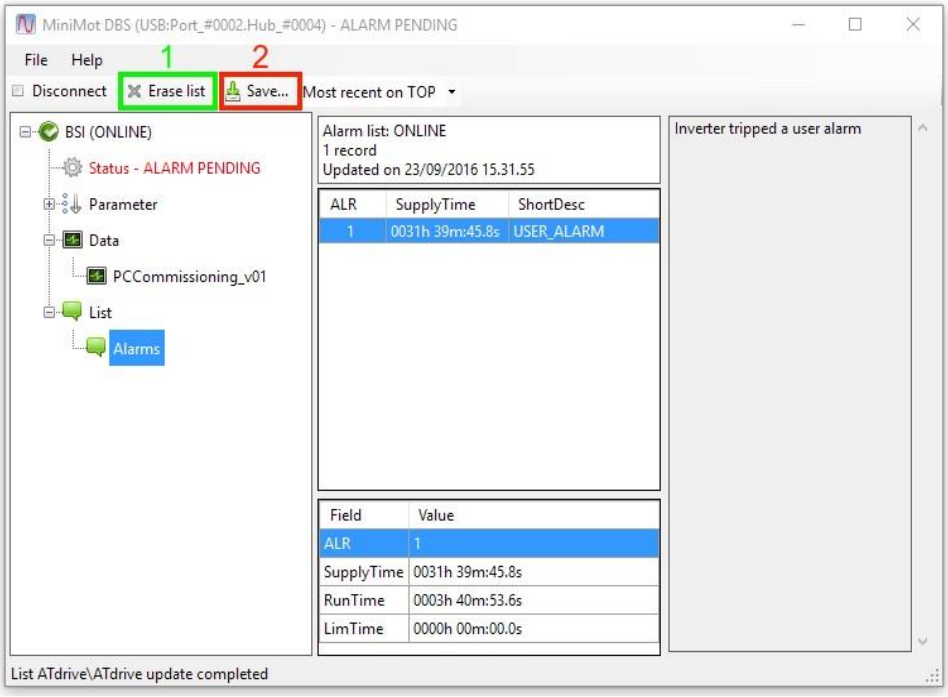

Figure 16

By selecting “list” under the “alarm” voice, it is possible to find the alarm history list.

1 “Erase List”: use this command to erase the whole list.

2 “Save”: use this botton to save the list into an external file.

3.2.3 Parameter

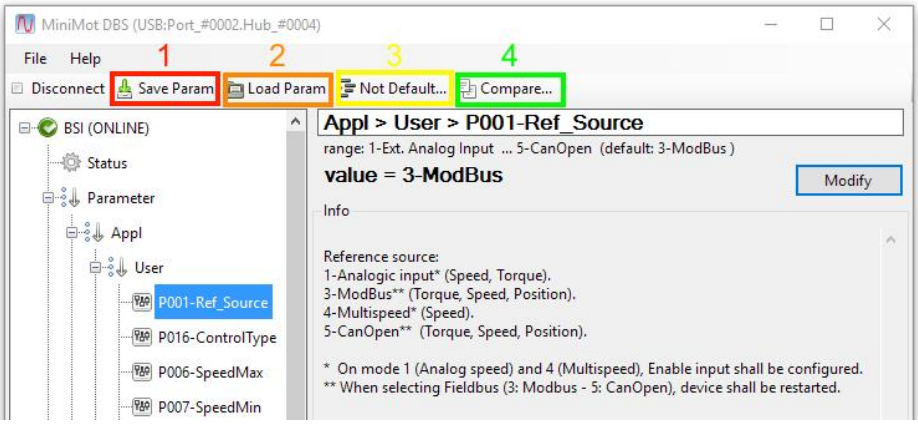

Figure 17

Under “Parameter” it is possible to find and set all the motor parameters.
See the section of this guide in order to understand the meaning of all point and set the desired configuration.
In order to change the value or to select a different voice in one of the parameters, click on modifiy, change the value and then select Update to load the changement Figure 18.

Figure 18

When the voice “parameter” is selected in the top of the window there are several usefull option:

1 “Save Param”: allows to save the parameter setting into an external file.

2 “Load Param”: allows to upload the parameter stored into an external file, directly in the driver storage.

3 “Not default”: shows wich parameter have been changed in respect of the default value.

4 “Compare”: allows to compare the parameter stored in the device with the parameters contained into an external file.

3.2.4 Monitoring

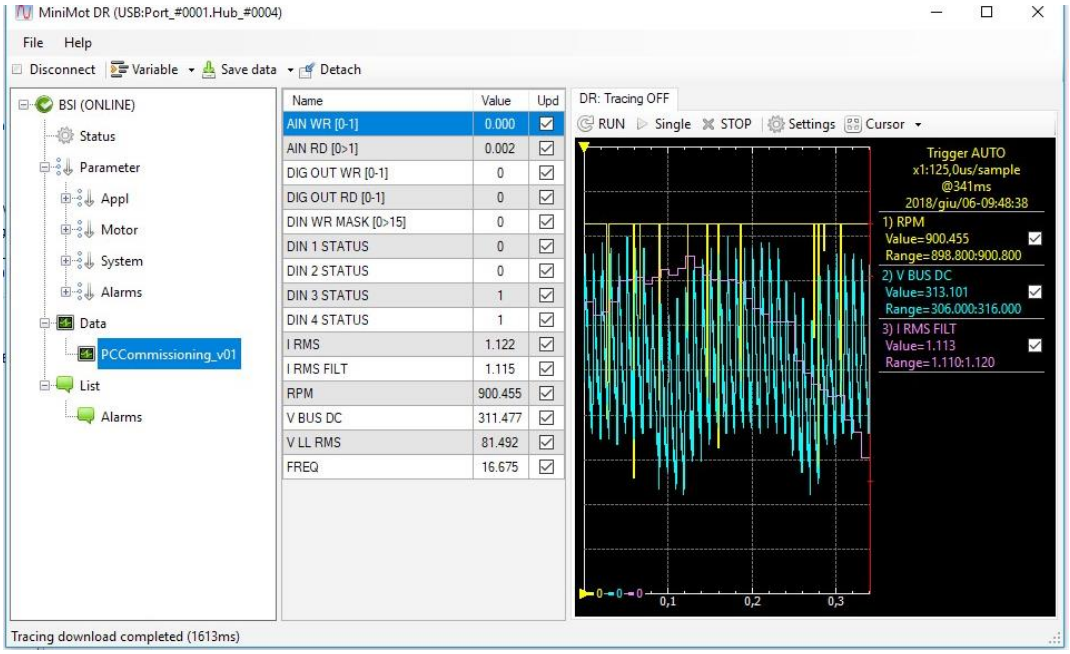

Figure 19

The program BSI is equipped with a tool useful in order to monitor the variables during the motor emplyment. Click on data and select PCCommisioning to see window shown in Figure 19

To activate the control of one or more variables toogle the white square under column “Upd”. The value is represent under the column “Value”.

To use the oscilloscope, open the window settings and set the desired measurement, then click on single in order to obtain the measurement.

4 Parameters

4.1 Appl

4.1.1 User

ID	NAME	DESCRIPTION	NOTE		
P001	Ref Source	Reference source selection	1	Analog Input[1]	
			4	Multispeed[1]	
			6	CanOver EtherCAT - DSP402[6]	
			7	Ethernet PowerLink - DSP402[7]	
			8	Ethernet/IP - DSP402[8]	
			9	Profinet IO - DSP402[9]	
			[1] On mode 1, 4 and 5 enable, input shall be configured [6] On mode 6 (CanOverEtherCAT) the device shall be restarted (only version DRBUS/ETH) [7] On mode 7 (Ethernet PowerLink) the device shall be restarted (only version DR-BUS/EPL) [8] On mode 8 (Ethernet/IP) the device shall be restarted (only version DRBUS/EIP) [9] On mode 9 (Profinet IO) the device shall be restarted (only version DR-BUS/EPN)		
P006	Speed Max	Max speed reference	0 ÷ 4000 [rpm]		
P007	Speed Min	Minimum speed reference in Analog mode	0 ÷ 4000 [rpm]		
P008	Ramp Acc	Acceleration	1 ÷ 15000 [rpm/s]		
P009	Ramp Dec	Deceleration	1 ÷ 15000 [rpm/s]		
P021	MotorChangeDir	Parameter to change the direction of motor	1	None	Disable
			2	Inverted	Inverted the rotation

4.1.2 Input Output

ID	NAME	DESCRIPTION	NOTE		
Analog					
P004	MinRefAnalog	Min analog reference	[0.0% ÷ 100.0%]		
P005	MaxRefAnalog	Max analog reference	[0.0% ÷ 100.0%]		
P043	AinMode	Set the analog input function	0	Voltage ref input	0÷10 [V]
			1	Voltage ref input	-10÷10 [V]
			2	Current ref input	0÷20 [mA]
			3	Current ref input	4÷20 [mA]
			WARNING: modality 2 and 3 are on request specified in the order.		
Digital Input					
P010	InputFunc1	Digital input function 1: Enable the digital control of the digital pnp input 1. Define the function controlled by the digital input 1.	0	Not Used	
			1	Enable/Stand-By[2]	
			2	Run/Stop[2]	
			3	Run Edge Triggered)[2]	
			4	Stop (Edge Triggered)[2]	
			5	Forward/Reverse[2]	
			6	Run/Stop Forward[2]	
			7	Run/Stop Reverse[2]	
			8	Error Reset	
			9	User Error	
			10	Multispeed Binary Selection, Bit 0[2]	
			11	Multispeed Binary Selection, Bit 1[2]	
			12	Multispeed Binary Selection, Bit 2[2]	
P011	InputFunc2	Digital input function 2	See P010		
P012	InputFunc3	Digital input function 3: Enable the digital control of the digital pnp input 3. Define the function controlled by the digital input 3.	0	Not Used	
			1	Enable/Stand-By[2]	
			2	Run/Stop[2]	
			3	Run Edge Triggered)[2]	
			4	Stop (Edge Triggered)[2]	
			5	Forward/Reverse[2]	
			6	Run/Stop Forward[2]	
			7	Run/Stop Reverse[2]	
			8	Error Reset	
			9	User Error	
			10	Multispeed Binary Selection, Bit 0[2]	
			11	Multispeed Binary Selection, Bit 1[2]	
			12	Multispeed Binary Selection, Bit 2[2]	
			13	STO 1 (Optional on request specified in the order)	
P013	InputFunc4	Digital input function 3: Enable the digital control of the digital pnp input 3. Define the function controlled by the digital input 3.	0	Not Used	
			1	Enable/Stand-By[2]	
			2	Run/Stop[2]	
			3	Run Edge Triggered)[2]	
			4	Stop (Edge Triggered)[2]	
			5	Forward/Reverse[2]	
			6	Run/Stop Forward[2]	
			7	Run/Stop Reverse[2]	

			8	Error Reset
			9	User Error
			10	Multispeed Binary Selection, Bit 0[2]
			11	Multispeed Binary Selection, Bit 1[2]
			12	Multispeed Binary Selection, Bit 2[2]
			13	STO 1 (Optional on request specified in the order)
P014	SilchekEN	Digital input function 5	0	Enabled
			1	Disabled
P020	DiglnInvMask	Defines the Active low or high status of the digital inputs	Example: 0b00001 Digital input 1 Active low 0b00101 Digital inputs 1 and 3 Active low	
Digital Output				
P015	OutFunc	Digital output. Defines what activates the motor output signal.	0	Always Off
			1	Ready
			8	Error
			9	Target Reached
			10	Fieldbus DS402
P064	TargReachedHyst	Defines the window within the event “target reach” has to happen.	Speed	[rpm] 0 ÷ 9999
P065	TargReachHystTime	Defines the time whiten the event “target reach” has to be completed.	[0 ÷ 9999] [ms]	

Digital Multi Speed			
P110	MultiSpeed1	Defines the value of the velocity for each binary combination of 3 multivelocity inputs. Only if P001=4	-4000 ÷ 4000 [rpm]
P111	MultiSpeed 2		
P112	MultiSpeed 3		
P113	MultiSpeed 4		
P114	MultiSpeed 5		
P115	MultiSpeed 6		
P116	MultiSpeed 7		
P117	MultiSpeed 8		

4.1.3 Fieldbus

ID	NAME	DESCRIPTION	NOTE
E-IP			
P170	IpAddr	Allow to set the slave address of the motor using Ethernet/IP	192.168.250.100
P172	IpMask	Defines the Ethernet/IP	255.255.0.0
P174	IpGateway	Defines the Ethernet/IP	0.0.0.0
Ecat (EtherCAT)			
P195	StationAddress	Defines the default station adress	0 ÷ 32767
PowerLink			
P197	NodeId	Defines the default Node-ID for PowerLink node	0 ÷ 32767
ProfinetIO			
P199	ByteOrder	Set the byte order style	Little/Big endian

4.2 Motor

ID	NOME	DESCRIZIONE	NOTE
P260	Motor Code	Motor type connected to inverter	Minimotor motor code or custom
P273	I2T-I	Maximum overload	100-300 % of nominal
P274	I2T-T	Time maximum load	5 – 600 [s]
P275	I_2sec	Maximum overcurrent for 2 sec	100-300% nominal
P282	CtrMode	Motor Control Mode	0-V/F 1-Vector
P295	TLimPos	Maximum positive torque value in reaspect to nominal value (200 = maximum)	0-200%
P296	TLimNeg	Minimum negative torque value in reaspect to nominal value (200 = maximum)	-200%-0
Brake			
P022	BrkDeactTime	Brake deactivation time after motor enable	[ms]
P023	BrkActTime	Brake activation time before motor command	[ms]
Custom			
P261	AutotuneEnable	Flag autotune DR Nearby	Solo se P260 = Custom
P262	Power	Nominal motor power	0,01 – 0,27[kW]
P263	Speed	Nominal motor speed at 50hz	100-4000 [Rpm]
P264	Current	Nominal current Star connection	0,01 – 1,400 [Arms]
P265	CosPhi	Motor cosphi	-
P270	Jmot	Rotor Inertia	[Kgcm^2)
Par			
P266	Rs	Estimated stator resistance	[Ohm]
P267	Rr	Estimated rotor resistance	[Ohm]
P268	Lr	Estimated rotor inductance	[Henry]
P269	Lm	Estimated mutual inductance	[Henry]
P271	KpSpeed	Proportional speed gain	-
P272	KiSpeed	Integral speed gain	
VF			
P283	VF_1_Freq	V/F table – frequency 1, % of nominal (50Hz)	0 – 200%
P284	VF_1_Volt	V/F table – Voltage 1, % della nominal (230V)	0 – 120%
P285	VF_2_Freq	V/F table – frequency 2, % of nominal (50Hz)	0 – 200%
P286	VF_2_Volt	V/F table – Voltage 2, % della nominal (230V)	0 – 120%
P287	VF_3_Freq	V/F table – frequency 3, % of nominal (50Hz)	0 – 200%
P288	VF_3_Volt	V/F table – Voltage 3, % della nominal (230V)	0 – 120%
P289	VF_4_Freq	V/F table – frequency 4, % of nominal (50Hz)	0 – 200%
P290	VF_4_Volt	V/F table – Voltage 4, % of nominal (230V)	0 – 120%

4.3 System

ID	NAME	DESCRIPTION	NOTE	
P202	StartUL	Define the user level at program start-up.	User	Free acces
			Advance	Free access
			Eol	PW needed
			Service	PW needed
P280	Supply 110V	Set supply voltage	CN9 and CN13 connector set accordingly	

4.4 Alarm

ID	NAME	DESCRIPTION	NOTE
P210	Nreset	Defines the number of autoresettable alarm event exceeded which the fault is generated	0 ÷ 100
P211	TminReset	Defines the time after which the alarm ca be autoresetted	0.5 ÷ 30 [s]
P212	Trestore	Defines the time after which the autoresettable alarm count is resetted	0.5 ÷ 1800 [s]

4.5 PressLimit

ID	NOME	DESCRIZIONE	NOTE
P300	SFunc1_en	Special function PressLimit enable	0 – Disabled 1- Enabled
P301	PLIM_TrqRestart	Maximum (positive, motor) value of torque limit percentage during restart	0÷200% [200 -> maximum]
P302	PLIM_FRestart	Percentage of frequency reference during restart (it must be greater than P303 (restart frequency)	0.1÷100%
P303	PLIM_FOff	Percentage of frequency value under which turn off the inverter (it must be smaller than P302)	0.1÷100%
P304	PLIM_TwaitOff	Time before try restarting	0.5 ÷ 3000 [s]
P305	PLIM_TOkRestart	Consecutive time to validate restart (Freq>=Ref)	0.5 – 30 [s]
P306	PLIM_TmaxRestart	Maximum time for restart; if Freq cannot raise to P302 consecutively for P305, after P306 try will be aborted for P304	0.5 ÷ 3000 [s]
P307	PLIM_TNoLoad	Time to understand no load is appled	0÷30000 [s] (30000 = endless)
P308	PLIM_TrqNoLoad	Torque threshold to understand no load is applied	0÷100%

5 LED status

LED color and operating modes (flashing / powering mode) depend on the fieldbus expansion Board mounted (Ethernet IP, Ethercat, etc).

5.1 Fieldbus Board EtherCAT

The indication LEDs are two:

LD1	RUN/ERR (Run/Error)	Represents the RUN operating state of the drive seen as EtherCAT slave (Green) and/or the error's status ERR in which the EtherCAT slave (Red) is located.	Bicolour LED Green/Red
LD2			
LD3	L/A IN (Link/Activity input)	Represents the link status ("L", LINK) and Tx / Rx ("A", ACT) data link traffic of Ethernet communication input ("in") to the Ethercat slave (green)	LED Green

They are mapped on the drive's LEDs in the following way:

LD1	**LD2**	**LD3**
RUN/ERR		L/A IN

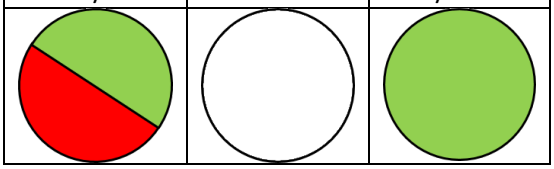

LED mapping on the drive

LED		**Indication** (*)	**Status**
LD1	**RUN**	OFF	**INIT**
		ON (Green)	**OPERATIONAL**
		BLINKING (Green)	**PRE-OPERATIONAL**
		SINGLE FLASH (Green)	**SAFE-OPERATIONAL**
	ERR	OFF	**No Error:** the communication works properly
		BLINKING (Red)	**General Configuration Error**: Possible cause: The status change required by the Master failed because of an Ethercat configuration error and/or incorrect object configuration.

		SINGLE FLASH (Red)	**Local Error:** The application level of the slave has changed the status of the Ethercat slave device independently: A cause may be a Sync error between master and slave so the device enters safe operation.
		RED (double flash)	**Application Watchdog Timeout**: The slave device application caused a WD: such as a Wathdog Timeout Sync Manager
LD2		OFF	**No features**
LD3	L/A IN	OFF	**No connection:** The link is not established
		ON (Green)	**Connected**: Links to the ethernet connection established correctly (LINK)
		FLASHING (Green)	**Connection OK**: The device sends and receives ethernet frames correctly on the network (ACT)

5.2 Fieldbus Board Ethernet IP

The indication LEDs are three:

LD1	MS (Machine state)	Represents the operating state of the Drive seen as an EthernetIP adapter	Bicolour LED Green/Red
LD2	NS (Network State)	Represents the network connection status of the Drive Ethernet IP Adapter.	Bicolour LED Green/Red
LD3	L/A IN (Link / Activity input)	Represents the link status ("L", LINK) and Tx / Rx ("A", ACT) data link traffic of Ethernet communication input ("in") to the Ethercat slave (Green)	Bicolour LED Green/Yellow

and they are mapped on the drive's LEDs in the following way:

LD1	**LD2**	**LD3**
MS	NS	L/A IN
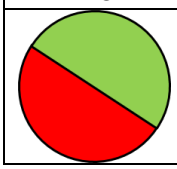	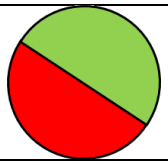	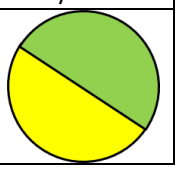

LED mapping on the drive

LED		**Indication** (*)	**Status**
LD1	**MS**	OFF ○	**No power:** If no power is supplied to the device, the module status indicator shall be steady off.
		ON (Green) ●	**Device operational:** If the device is operating correctly, the module status indicator shall be steady green
		FLASHING (Green) ✹	**Standby:** If the device has not been configured, the module status indicator shall be flashing green.
		ON (Red) ●	**Major fault:** If the device has detected a non-recoverable major fault, the module status indicator shall be steady red.
		FLASHING (Red) ✹	**Minor fault:** If the device has detected a recoverable minor fault, the module status indicator shall be flashing red. NOTE: An incorrect or inconsistent configuration would be considered a minor fault
		FLASHING (Red/Green)	**Self-test:** While the device is performing its power up testing, the module status indicator shall be flashing green/red.

LD2	**NS**	OFF	Not powered, no IP address: If the device does not have an IP address (or is powered off), the network status indicator shall be steady off.
		ON (Green)	**Connected**: If the device has at least one established connection (even to the Message Router), the network status indicator shall be steady green.
		FLASHING (Green)	**No connections**: If the device has no established connections, but has obtained an IP address, the network status indicator shall be flashing green.
		ON (Red)	**Duplicate IP**: If the device has detected that its IP address is already in use, the network status indicator shall be steady red.
		FLASHING (Red)	**Connection timeout**: If one or more of the connections in which this device is the target has timed out, the network status indicator shall be flashing red. This shall be left only if all timed out connections are reestablished or if the device is reset.
		FLASHING (Red/Green)	**Self test**: At power up the module performs a self test
LD3	**L/A IN**	OFF	**No connection:** The link isn't established
		ON (Yellow)	**Connected**: Links to the ethernet connection established correctly (LINK)
		FLASHING (Green/Yellow)	**Connection OK**: The device sends and receives ethernet frames correctly on the network (ACT)

(*) Definition of LED's timings

Indicator states	Definition
ON	Constantly on
OFF	Constantly off
BLINKING	The indicator shall turn on and off iso-phase with a frequency of 2.5 Hz: on for 200ms followed by off for 200ms
SINGLE FLASH	The indicator shall show one short flash (200ms) followed by a long off phase (1000ms).
DOUBLE FLASH	The indicator shall show a sequence of two short flashes (200ms), separated by an off phase (200ms), and followed by a long off phase (1000ms).

N FLASH	The indicator shall show a sequence of “n” short flashes (200ms), separated by an off phase (200ms), and followed by a long off phase (1000ms).

5.3 Fieldbus Board Ethernet PowerLink

The indication LEDs are three:

LD1	BS (Bus Status)	Representing the NMT State of PowerLink stack	Bicolour LED Green/Red
LD2	BE (Bus Error)	Representing the error state of PowerLink stack	Bicolour LED Green/Red
LD3	L/A (Link / Activity)	Representing the status of EtherNet	Bicolour LED Green/Yellow

and they are mapped on the drive's LEDs in the following way:

LD1	**LD2**	**LD3**
BS	BE	L/A
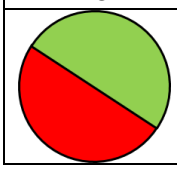	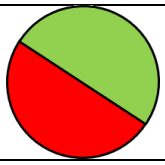	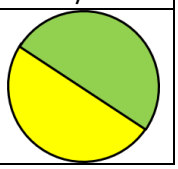

LED mapping on the drive

LED		**Indication** (*)	**Status**
LD1	**BS**	OFF ○	**No power:** If the device does not have an IP address (or is powered off), the network status indicator shall be steady off.
		ON (Green) ●	**Operational:** In this state the node is configured and the cyclic IO data exchange starts.
		TRIPLE FLASH (Green) ☀	**ReadyToOperate:** This state is used to confirm the command NMT_EnableReadyToOperate to the MN. This signals that the node is configured and waiting for order to go to NMT_CS_OPERATIONAL. This change happens when receiving the command NMT_StartNode.
		DOUBLE FLASH (Green) ☀	**Pre-Operational 2:** This state is entered, if an Ethernet POWERLINK cycle is detected (SoC frames are received cyclically). In this state the MN continues configuration of the node.
		SINGLE FLASH (Green) ☀	**Pre-Operational 1:** This is the first state within valid EPL network communication. Here the MN starts configuring the node. The node proceeds to the next state after detecting a SoC frame on the bus (Start of cycle).
		FLICKERING (Green) ☀	**Basic Ethernet:** This state is entered, if after connecting to the bus, the node does not receive any EPL frames within a defined timeout. In this state, the node works according to IEEE 802.3 and may perform Legacy Ethernet communication. No Ethernet POWERLINK cycle is available in this state.
		BLINKING (Green)	**Stopped:** This state is entered if the command NMT_StopNode is received while in valid EPL cycle. In this state the node continues to be part of a valid EPL cycle, but

			no valid IO data exchange is performed.
LD2	**BE**	OFF	**No error:** The Slave has no error.
		ON (Red)	**Error:** The Slave has detected error.
LD3	**L/A**	OFF	**No connection:** The device has no link to the Ethernet
		ON (Green)	**Link**: The device is linked to the Ethernet, but does not send/receive Ethernet frames.
		FLICKERING (Green)	**Activity**: The device is linked to the Ethernet and sends/receives Ethernet frames.

5.4 Fieldbus Board Ethernet ProfiNet IO

The indication LEDs are three:

LD1	SF (Sistem Failure)		Bicolour LED
LD2	BF (Bus Failure)		Bicolour LED
LD3	L/RX/TX (Link / Activity)		Bicolour LED

They are mapped on the drive's LEDs in the following way:

LD1	LD2	LD3
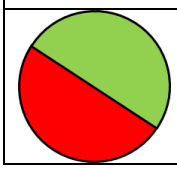	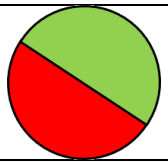	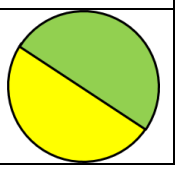

LED mapping on the drive

LED		Indication (*)	Status
LD1	**SF**	OFF	**No error**
		ON (Red)	**Error:** Watchdog timeout; channel, generic or extended diagnosis present; system error.
		FLASHING (Red)	DCP signal service is initiated via the bus
LD2	**BF**	OFF	**No error**
		ON (Red)	**Error:** Watchdog timeout; channel, generic or extended diagnosis present; system error.
		FLASHING (Red)	DCP signal service is initiated via the bus.
LD3	**L/RX/TX**	OFF	**No connection:** The device has no connection to the Ethernet.
		ON (Green)	**Link**: A connection to the Ethernet exists.
		FLASHING (Yellow)	**Activity**: A connection to the Ethernet exists.

6 Alarm

ID	NAME	DESCRIPTION	
0	NONE	No alarm	
1	USER	User alarm	
2	DATAFLASH	Data flash error	
3	OVERVOLTAGE	Overvoltage	autoresettable
4	HW_SHORT_CIRCUIT	Overcurrent hardware	autoresettable
5	SW_SHORT_CIRCUIT	Overcurrent software	autoresettable
7	OVER_TEMP_MOTOR	Motor overtemperature	autoresettable
9	UNDERVOLTAGE	Undervoltage	
10	OVERLOAD	I2t alarm	
20	PARAM_MEMORY_ALARM	Parameter storage not available or damaged	
21	PARAM_VALUE_WRONG	Wrong value parameter	
22	PARAM_RESTORE_KO	Restore parameter default error	
23	MOTOR_PARAM_RESTORE_KO	Restore motor parameter default error	
90	EXT_ALARM	User alarm from digital input	
92	MOT_UNDEFINED	Motor type not selected	
98	STO_MISMATCH	One of the two STO signals is not congruent	
99	SILCHK_ALARM	Hardware problem on STO chain	
101	MOT_MODEL	Wrong motor selected	
102	MOT_INCOMPAT	Motor model is not compatible with power	
103	MOT_COPY	Copy of motor parameter to custom failure	
104	MOT_COPY_SPEED	Copy of motor speed loop parameter failed	
105	1MS_OVERRUN	Task 1ms overrun	
106	10MS_OVERRUN	Task 10ms overrun	
107	FB_BOARD_MISMATCH	Fieldbus board mismatched	
108	FB_BOARD_FAILURE	Fieldbus board not correctly initialized	
109	FB_SEC_MEMORY	Fieldbus board’s secury memory failure	
110	FB_APP_FAILURE	Fieldbus mode not compatible with hardware	

Autoresettable error, see parameter P210, P211, P212

7 Motor Parametrization for DR NEARBY and DR-BUS NEARBY

DR and DR-BUS are factory calibrated to work with out Three-Phase Motors. DR NEARBY and DR-BUS NEARBY need to be parametrized to work with motors not from Mini Motor.

This operation is peformed with our BSI software, check chapter 3 for an overview.

First, change user level from USER to ADVANCE.

7.1 Autotuning

Autotune function is avalaible when parameter P260 is on Custom, which is the default value for the DS-Nearby.

The procedure can be done either via the BSI software or via Fieldbus communication.

7.1.1 BSI

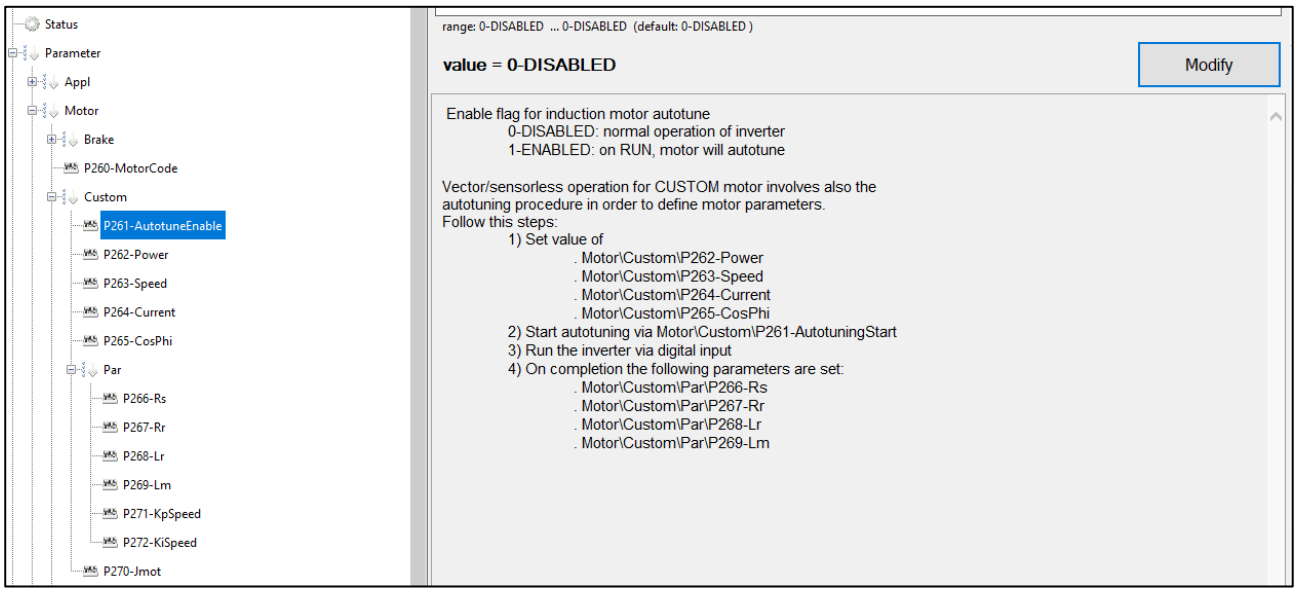

Figura 1 - BSI Custom motor autotune parameters

- Conect the DR Nearby to the Motor you want to drive, paying attention to the connections.
- Connect the DR Nearby to the to the power supply.
- Prepare the analog/digital inputs to enable the Drive.
- Select ADVANCE user level.
- Navigate to the Parameter > Motor > Custom menu
- Write in parameters P262, P263, P264, P265 the nominal characteristics of the motor to drive.
- Set parameter P261 to 1.
- Start the motor with the digital inputs. It will rotate back and forth and vary its speed.
- At the end of the procedure, the motor will stop. Disable the Drive.
- Parameters P266,267,268 e 269 will be overwrittens with the values estimated in the autotune procedure.
- Set parameter P261 to 0.

7.1.2 Fieldbus

- Conect the DR- BUS Nearby to the Motor you want to drive, paying attention to the connections Collegare il DR-BUS Nearby all'alimentazione
- Connect the DR-BUS Nearby
- Write to P262, P263, P264, P265 the parameters of the motor you intend to drive. Hexadecimal addresses for these parameters are: 16#2106. 16#2107, 16#2108, 16#2109.
- Set P261, adress 16#2105, to 1.
- Check register 16#3020 which tracks the status of the autotune parameter
  0: Autotune Off
  1: Autotune Working
  2: Autotune Error
  10: Autotune Completed.
- Start the motor, having the control word value at 16#0F.
- When register 16#3020 will be 10, disable the Drive and set P261 (16#2105) to 0.

8 EtherCAT / PowerLink

Note: available only for drivers equipped with CanOpen over EtherCAT or Ethernet PowerLink.
(DR-BUS/---/ETH ; DR-BUS/---/EPL).

8.1 Overview

The present document describes the adherence of the Minimotor stack to the following specification:

CanOPEN

- CiA DS301 v4.02 (CanOPEN DLL)
- CiA DS402 v3.0.1.15 (servodrive profile)

CanOPEN over EtherCAT:

- ETG1000-2 v1.0.1 (physical layer)
- ETG1000-3 v1.0.1 (DLL services)
- ETG1000-4 v1.0.1 (DLL protocols)
- ETG1000-5 v1.0.1 (AL services)
- ETG1000-6 v1.0.1 (AL protocols)
- CiA DS402 v3.0.1.15 (servodrive)
- ETG6010 v1.1.0 (CiA 402 impl. directives)

Ethernet PowerLink (EPL)

- EPSG DS 301 V1.2.0 (Powerlink DLL)

The purpose of the present document is to describe what optional feature are implemented by the servo-motor CanOPEN, CoE or EPL.

8.2 Object dictionary

Object dictionary is divided in the following sections:

Range oggetti	Funzioni
1000h ... 1FFFh	Communication profile area
2000h ... 21FFh	Manufactor parameter area
3000h ... 3FFFh	Manufactor specific object area
6000h ... 67FFh	Profiled objects

Other areas are unused; the object list is common between CoE and EPL implementation.

8.2.1 Communication area

The following table shows the list of communication area objects; since some object are relevan only for CanOPEN or CoE implementation, the table shows in which fieldbus the object is relevant.

Index	Description	CoE	EPL
1000	Device type	X	X
1001	Error register	X	X
1003	Predefined error	X	
1006	Cycle length		X
1010	Store parameters (*1)	X	
1018	Identity object	X	X
1020	CFM Verify Configuration		X
1030	NMT Interface Group 0h		X
1300	SDO Sequ Layer Timeout		X
1400	PDO RX 1 – config (*2)	X	X
1600	PDO RX 1 – mapping (*2)	X	X
1800	PDO TX 1 – config (*2)	X	X
1A00	PDO TX 1 – mapping (*2)	X	X
1C00	Sync manager types	X	
1C0A	DLL_CnCollision REC		X
1C0B	DLL_CnLoss REC		X
1C0C	DLL_CnLossSoC_REC		X
1C0D	DLL_CnLossSoA REC		X
1C0E	DLL_CnSpCJitter REC		X
1C0F	DLL_CnCRCError REC		X
1C10	Sync manager 0 config	X	
1C11	Sync manager 1 config	X	
1C12	Sync manager 2 config	X	
1C13	Sync manager 3 config (*2)	X	
	DLL_CnSocJitterRange (*2)		X
1C14	DLL_CnLossOfSocTolerance		X
1C32	Output sync parameters	X	
1C33	Input sync parameters	X	
1E40	NWL_IpAddrTable_0h_REC		X
1E4A	NWL_IpGroup_REC		X
1F82	NMT_FeatureFlags_U32		X
1F83	NMT_EPLVersion_U8		X
1F8C	NMT_CurrNMTState_U8		X
1F93	NMT_EPLNodeID_REC		X
1F98	NMT_CycleTiming_REC		X
1F99	NMT_CNBasicEthernetTimeout_U32		X
1F9A	NMT_HostName_VSTR		X
1F9E	NMT_ResetCmd_U8		X

(*1) To save parameters to non-volatile storage a 32bit write to object 1010h.0 needs to be performed; in particular the value to be written to save parameter is 65766173h (“SAVE”).

(*2) PDO config and mapping have different encoding for CoE and EPL. Please check DLL manual for details.

8.2.2 Manufacturer parameter area

The object range 2000h ... 21FFh allows to access servodrive parameters; the following table summarize the details of a parameter object:

Object details

Subidx	0
Object type	16bit, signed integer
Access	Read/Write
Pdo mappable	NO

Object dictionary for manufacturer parameters

Index	
2000	Parameter 0
2001	Parameter 1
...	
21FF	Parameter 511

For details of the parameter meaning and encoding refer to the servodrive manual.
NOTE: write objects in the 2000h ... 21FFh range will alter only RAM image of the parameter; to actually save parameter to non-volatile storage a write to object 1010h.0 needs to be performend (see 1010h).

8.2.3 Manufacturer specific area

This area contains several objects that allows to read/write manufacturer specific data.

Index		Access	Data type	Pdo mappable
3000	Ain0 value -32768 ... 32768	RO	U16	YES
3001	Digital input1 bit0: Digital input2 bit1: Digital input3 bit2: Digital input4 bit3:	RO	U16	YES
3002	Digital output bit0: digital output0	RW	UINT16	YES
3005	Motor temperature as tenth of °C (200 >> 20.0°C)	RO	INT16	YES
3008	Actual alarm: 0: no alarm >0: an alarm is pending NOTE: value read from this object is the alarm code as defined in the DR manual (e.g. OVERVOLTAGE=3 etc) **Value IS NOT the EMCY code as defined in this document.**	RO	UINT16	YES
3010	Power stage tension as tenth of Volt (240 >> 24.0V)	RO	UINT16	YES
3011	Motor current as milliAmpere (+10 >> +1.0A)	RO	INT16	YES
3012	Motor Power as Watt	RO	U16	YES
3100	Software version	RO	U32	
3101	Software revision	RO	U32	

3102	Software crc	RO	U32	

8.2.4 Profiled objects

The range 6000h ... 67FFh of objects are defined as specified by CiA402; refer to the application area for further information.

Index		Access	Type	Pdo mappable
6040	Control word	RW	U16	YES
6041	StatusWord	RO	U16	YES
6042	VL Target Velocity	RW	S16	YES
6043	VL Velocity Demand	RO	S16	YES
6044	VL Velocity Actual Value	RO	S16	YES
6046	VL Velocity Amount 6046.0: number of sub-idx (2) 607D.1: Min amount 607D.2: Max amount	 RO RW RW	 U8 U32 U32	 YES YES
6048	VL Velocity Acceleration 6046.0: number of sub-idx (2) 6048.1: Delta speed 6048.2: Delta time	 RO RW RW	 U8 U32 U16	 YES YES
6049	VL Velocity Deceleration 6046.0: number of sub-idx (2) 6049.1: Delta speed 6049.2: Delta time	 RO RW RW	 U8 U32 U16	 YES YES
605A	Quick stop option code	RW	S16	
6060	Mode of operation	RW	S8	YES
6061	Mode of operation display	RO	S8	YES
6078	Current actual value	RO	S16	YES
6079	Dclink voltage	RO	U32	YES
60FD	Digital inputs	RO	U32	YES
60FE	Digital outputs 60FE.0 – number of sub-idx (2) 60FE.1 – physical outputs 60FE.2 – output mask	 RO RW RW	 U8 U32 U32	 YES YES
6502	Supported mode of operation	RO	U32	

8.3 CiA402 – Frequency converter

8.3.1 Supported modes

The following mode of operations are supported by the servodrive implementation

	Mode of operation encoding
VELOCITY MODE	2

8.3.2 State machine

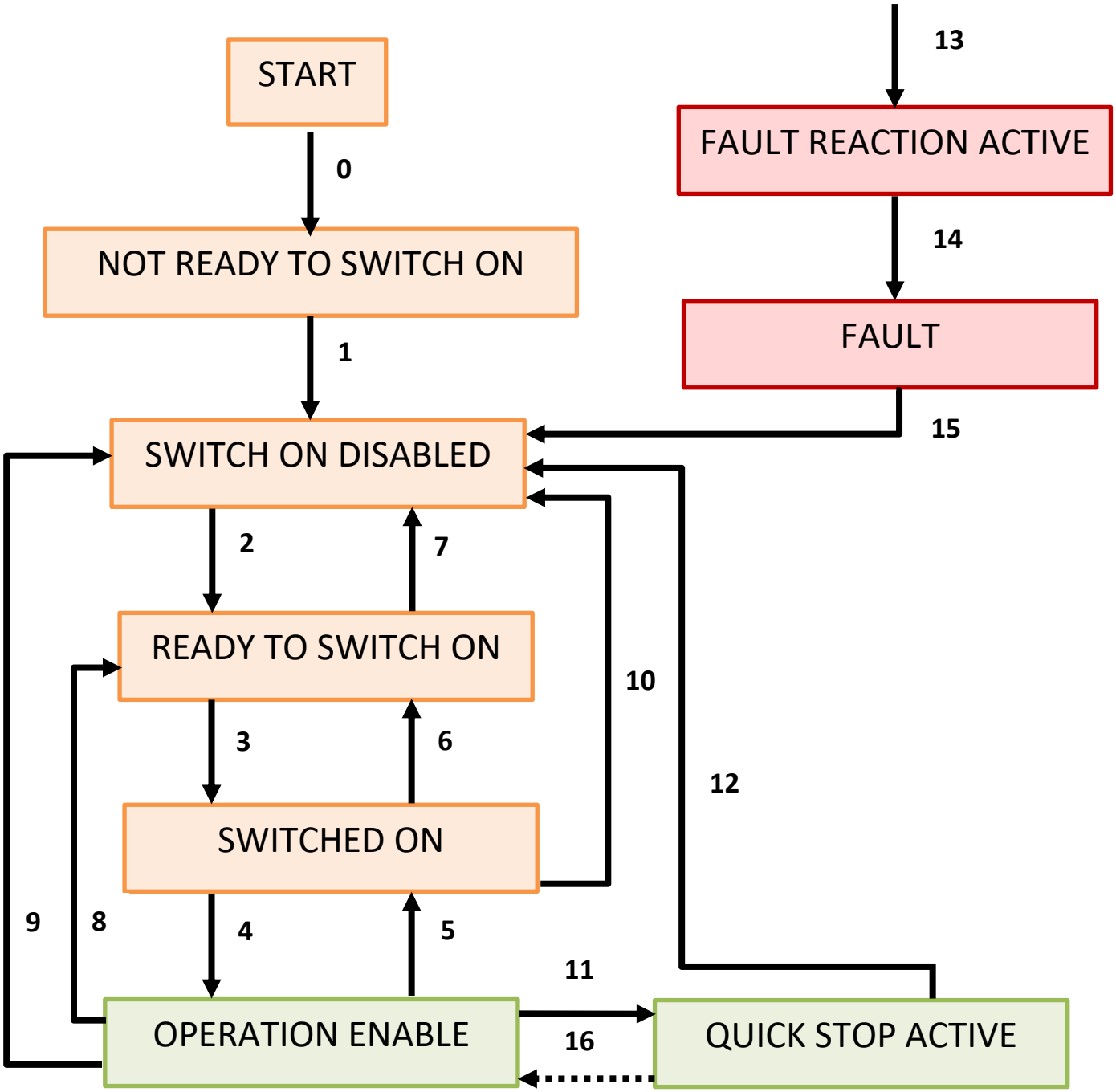

States in yellow have power disabled. States in green have power enebled. Red states are alarm states.

State machine description

State	Descriptions
Not Ready to Switch On	Axis not ready to start, initialization not completed.
Switch On Disable	Axis ready to be started, parameters can be transferred, power can be enabled.

Ready To Switch On	Parameters can be transferred, power can be enabled, motor cannot be actuated
Switched On	Parameters can be transferred, power can be enabled, motor cannot be actuated
Operation Enable	No fault Present, Motor functions and power are enabled.
Quick Stop Active	Drive stopped with an emergency ramp, power enabled, functions disabled.
Fault Reaction Active	An Error occurred, drive is stopping.
Fault	A fault is active, drive is stopped and disabled.

To change between states, following the numbered transitions, you need to send the correct control word, object 6040h, with specific bits enabled as shown in the following table.

Command	6040h Control Word bits					Transitions
	Bit 7	Bit 3	Bit 2	Bit 1	Bit 0	
Shutdown	0	X	1	1	0	2,6,8
Switch On	0	0	1	1	1	3
Disable Voltage	0	X	X	0	X	7,9,10,12
Quick Stop	0	X	0	1	X	7,10,11
Disable Operation	0	0	1	1	1	5
Enable Operation	0	1	1	1	1	4,16
Fault Reset	↑	X	X	X	X	15

Control Word encoding i sas following:

Bit	Sigla	Nome
0	so	Switch On
1	ev	Enable Voltage
2	qs	Quick Stop
3	eo	Enable Operation
4	oms	Operating Mode Specific
5	oms	Operating Mode Specific
6	oms	Operating Mode Specific
7	fr	Fault Reset
8	h	Halt
9	oms	Operating Mode Specific
10	r	Reserved
11	ms	Manufacturer Specific
12	ms	Manufacturer Specific
13	ms	Manufacturer Specific
14	ms	Manufacturer Specific
15	ms	Manufacturer Specific

The drive state is communicated with object 6041h, the Status Sword.

The DS402 State Machine States are communicated with the following bits from the Status Word

StatusWord bit values	State Machine State
xxxx xxxx x0xx 0000	Not Ready To Switch On
xxxx xxxx x1xx 0000	Switch On Disabled
xxxx xxxx x01x 0001	Ready To Switch On
xxxx xxxx x01x 0011	Switched On
xxxx xxxx x01x 0111	Operation Enabled
xxxx xxxx x00x 0111	Quick Stop Active
xxxx xxxx x0xx 1111	Fault reaction Active
xxxx xxxx x0xx 1000	Fault

Status Word encoding is the following:

Bit	Sigla	Nome
0	rtso	Ready to Switch On
1	so	Switched On
2	oe	Operation Enabled
3	f	Fault
4	ve	Voltage Enabled
5	qs	Quick Stop
6	sod	Switch On Disabled
7	w	Warning
8	ms	Manufacturer Specific
9	rm	Remote
10	tr	Target Reached
11	ila	Internal Limit Active
12	oms	Operating Mode Specific
13	oms	Operating Mode Specific
14	ms	Manufacturer Specific
15	ms	Manufacturer Specific

8.3.2.1 Velocity Mode

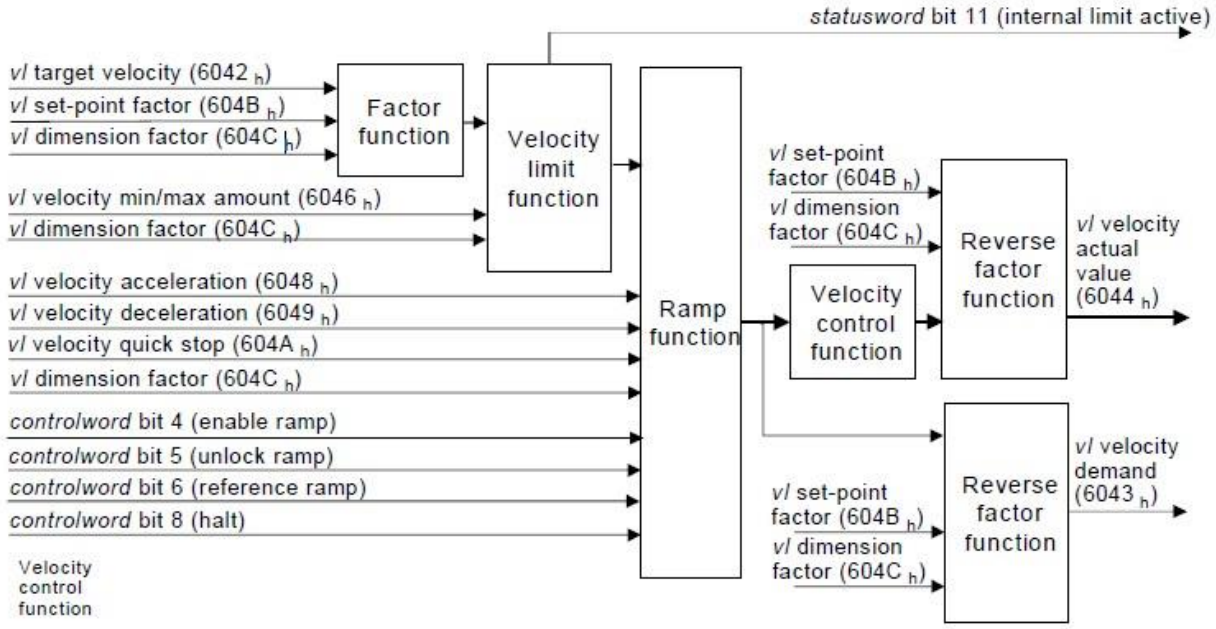

Option features NOT implemented:

- 604A vl quick stop
- 604B vl set-point factor
- 604C vl dimension factor

8.4 Default PDO mapping (Only Ethercat)

Output	• 6040h: control word • 6042h: vl target velocity • 3002h: digital output
Input	• 6041h: status word • 6043h: vl velocity demand • 3000h: Analog input 0 • 3001h: Digital Input

8.5 EMCY codes

The following table summarizes the emergency codes emitted by the servodrive whenever an alarm is detected.

Code	Meaning
2220h	Continuous overcurrent
2230h	Instantaneous overcurrent
3110h	Overvoltage in power supply
4210h	Overtemperature in the power stage

4310h	Overtemperature in the motor
5530h	Hardware data storage error
5531h	Software data storage error
5532h	Parameter value error
6200h	User generated alarm
9000h	Digital input generated alarm
FF04h	Motor parameters copy error
FF05h	Motor parameter copy error (speed loop)
FF15h	1ms task overtime
FF16h	10ms task overtime
FF19h	Parameter restore error
FF20h	Motor not calibrated
FF21h	No movement during encoder calibration procedure
FF22h	Wrong direction during encoder calibration procedure
FF23h	Error during autoconfiguration procedure
FF24h	Error reading encoder multiturn information
FF25h	Error reading encoder singleturn information

9 Ethernet IP

Note: available only for drivers equipped with Ethernet IP optional board (DR-BUS/---/EIP).

9.1 Overview

This document outline the conformance of the Ethernet/IP and CIP stack implemented in the servodrive; the following documents applies except otherwise stated:

- CIP Network library – Volume 1 (edition 3.3, november 2007)
- CIP Network library – Volume 2; Ethernet/IP adaptation of CIP (edition 1.4, november 2007)
- CiA DS402 v3.0.1.15

Furthermore the CiA DS402 adaptation to CIP are described in the relevant section.

9.2 CIP Objects

The servodrive implements the following objects of the CIP object model:

- CIP common objects
    - Identity object – 01h
    - Assembly object – 04h
    - TCP object – F5h
    - Ethernet object – F6h;

- Manufactor specific objects
    - COM object – 0x64
    - PAR object – 0x65
    - MISC object – 0x66
    - CIA402 objects – 0x67

Furthermore the following ASSEMBLIES contains process data:

- O>>T: Assembly 0x64
- T>>O: Assembly 0x65
- CFG: Assembly 0x66

9.2.1 COM object – 0x64

Instance	Attribute ID	Name	Data Type	Unit meas.	Access
0x0	0x01	Revision	UINT		RO
0x1	0x01	Software edition	UINT		RO
	0x02	Software CRC	UDINT		RO
	0x10	Save parameters NOTE: to save parameter, value 0x65766173 should be written	UDINT		RO

9.2.2 PAR object – 0x65

Instance	Attribute ID	Name	Data Type	Unit meas.	Access
0x0	0x01	Revision	UINT		RO
0x1	0x00	P000	UINT	(*1)	RW
	0x01	P001	UINT	(*1)	RW
	...				
	0xFF	P255	UINT	(*1)	RW
0x2	0x00	P256	UINT	(*1)	RW
	0x01	P257	UINT	(*1)	RW
	...				
	0xFF	P511	UINT	(*1)	RW

(*1) : please refer to the parameter list for actual meaning of the parameters.

Special parameters

- Appl>Fieldbus>CIP>P170-IpAddr
  This parameter is the ip address for the CIP module; since IP address is 32bit wide and normal parameters are 16bit wide, two parameters are actually used:
  - o Parameter n.170: 16 most-significant word of IP address
  - o Parameter n.171: 16 least significant word of IP address
- Appl>Fieldbus>CIP>P172-IpMask
  IP net mask for CIP module, analogous to IP address:
  - o Parameter n.172: 16 most-significant word of IP net-mask
  - o Parameter n.173: 16 least significant word of IP net-mask
- Appl>Fieldbus>CIP>P174-IpGateway
  Ip gateway address; used only whenever IP routing is used (not used if master/slave are in the same subnet)
  - o Parameter n.174: 16 most-significant word of IP gateway
  - o Parameter n.175: 16 least significant word of IP gateway

9.2.3 MISC object – 0x66

Instance	Attribute ID	Name	Data Type	Unit meas.	Access
0x0	0x01	Revision	UINT		RO
0x30 (48)	0x00	Analog input 0	UINT		RO
	0x01	Digital inputs	UINT		RO
	0x02	Digital outputs	UINT		RW
	0x03	Heatsink temperature	UINT	0.1 °C	RO
	0x05	Board temperature	UINT	0.1 °C	RO
	0x08	Actual Alarm	UINT	N/A	RO
	0x10	Dclink voltage	UINT	0.1 V	RO
	0x11	Current actual value	UINT	mA	RO
	0x12	Current limit for PP/PV/PT	UINT	mA	RO

9.2.4 CIA402 object – 0x67

Instance	Attr. ID	Name	Data Type	Unit meas.	Access
0x0	0x01	Revision	UINT	-	RO
0x60 (96)	0x40	Control word	UINT	-	RW
	0x41	Status word	UINT	-	RO
	0x42	Vl Target Velocity	INT	rpm	RW
	0x43	Vl Velocity Demand	INT	rpm	RO
	0x44	Vl Velocity Actual Value	INT	rpm	RO
	0x46	Vl Velocity Amount index1: Min speed index2: Max speed	ARRAY[1..2] OF UDINT	rpm	RW
	0x48	Vl Velocity Acceleration index1: Delta speed index2: Delta time	ARRAY[1..2] UDINT	rpm s	RW
	0x49	Vl Velocity Deceleration index1: Delta speed index2: Delta time	ARRAY[1..2] UDINT	rpm s	RW
	0x5A	Quick-stop option code	INT	-	RW
	0x60	Mode of operation	SINT	-	RW
	0x61	Mode of operation display	SINT		RO
	0x65	Following error window	DINT	pulses	RW
	0x78	Current actual value	INT	thousand-th of rated	RO

	0x79	Dc Link voltage	UDINT	X 0,1 V	RO
	0xFD	Digital inputs	UDINT		RO
	0xFE	Digital output Index1: Physical output Index2: Output mask	ARRAY[1..2] OF UDINT		RW
0x65	0x02	Supported mode of operations	UDINT		RO

9.3 Process data

The configuration for process data is the following:

- Assembly 0x64 (Originator to Target, **DR inputs - PLC outputs**)
  Assembly length: 50bytes

Offset	Type	Attribute	Class	Instance	Attribute	Default	Meaning
0x00	U16	ControlWord	0x67	0x60	0x40	0000h	See Dsp402
0x02	S16	Vl target velocity	0x67	0x60	0x42	+0	Rpm
0x04	S16	Digital Output	0x66	0x30	0x02	0	
0x06	U32	Vl velocity acceleration	0x67	0x60	0x48.1	+0	Rpm/s
0x10	U32	VI velocity deceleration	0x67	0x60	0x49.1	+0	Rpm/s

- Assembly 0x65 (Originator to Target, **DR outputs - PLC inputs**)
  Assembly length : 20bytes

Offset	Type	Attribute	Class	Instance	Attribute	Default	Meaning
0x00	U16	StatusWord	0x67	0x60	0x41	0250h	See Dsp402
0x02	S16	Vl velocity demand	0x67	0x60	0x43		Rpm
0x04	S16	Analog input	0x66	0x30	0x00		
0x06	S16	Digital input	0x66	0x30	0x01		
0x08	S16	Current actual value	0x67	0x60	0x78		% Nominale
0x10	U16	VDclink	0x67	0x30	0x10	+0	x 0.1V
0x12	U16	ActualAlarm	0x67	0x30	0x08	0	See DR Manual

10 ProfiNET

Note: available only for drivers equipped with ProfiNET optional board (DR-BUS/---/EPN).

10.1 Overview

This document outline the details of the Profinet implementation. By enabling Profinet/DSP402 “reference mode”, the motor is commanded by means of CanOPEN DSP402 state machine and profiles.

For further information, please refer to:

- DR user manual: information about parametrization through USB and PC interface
- Dsp402 v3: information about device state machine, control word/status word encoding and object dictionary.

10.2 Device identity

- Vendor_ID: 0x0427
- Device_ID: 0x0002

10.3 Process data

- PLC Inputs (14byte)

Offset	Type	Attribute	DSP402 object	Default	Meaning
0x00	U16	StatusWord	6041h.0	0250h	see Dsp402
0x02	S16	VL Velocity Demand	6043h.0	+0	rpm
0x04	S16	Analog Input	3000h.0		
0x06	S16	Digital Input	3001h.0		
0x08	S16	Current actual value	6078h.0		% della coppia nominale
0x10	U16	Vdc Link	3010h.0		X 0,1 V
0x12	U16	Actual Alarm	3008h.0		See Alarm List

- PLC Outputs (14byte)

Offset	Type	Attribute	DSP402 object	Default	Meaning
0x00	U16	Contro lWord	6040h.0	0000h	see Dsp402
0x02	S16	Vl Target Velocity	6042h.0	0	Rpm
0x04	S16	Digital Output	3002h.0	0	
0x06	U32	Vl Velocity Acceleration	6048h.1	0	Rpm/s
0x10	U32	VL Velocity Deceleration	6049h.1	0	Rpm/s

11 Warranty Conditions

We recommend reading this document closely and ensuring you have understood it before purchasing the product. Contact the manufacturer directly with any queries.

The manufacturer guarantees its products from defects in materials and/or workmanship for a period of **twelve (12) months** (unless otherwise specified in contractual documentation) from the date of delivery. The warranty is limited to repair of the product, or replacement, at the manufacturer's discretion.

The warranty does not cover damage, malfunctions, losses or requests for compensation due to:

- Operational errors in use and/or installation
- Modifications performed by the purchaser
- Unauthorised repairs
- Dropping of the device
- Natural disasters (fire, flood, lightning strikes etc.)
- Incorrect storage and/or maintenance

The burden of proof of any defect (and for any request for assistance in the place of use) lies with the purchaser.

12 Disclaimer

The manufacturer shall not be liable:

- For determining the suitability of the product to meet the customer's needs; this shall remain the responsibility of the customer themselves
- For the use of this product as a safety device for machinery which represents a hazard to persons or property
- For conformity of the product with legislation, standards and regulations applicable to the collection of products required for the purchaser's application. The purchaser shall therefore be responsible for guaranteeing the conformity of their machinery to such standards.

Furthermore:

- The product performance specified in this document does not represent a guarantee but merely a reference for the choice of the most appropriate solution for the purchaser's requirements, as it is the result of the manufacturer's testing conditions
- The product may be subject to modifications in order to make improvements, or for other reasons. Contact the manufacturer to confirm these.
- The information contained in the following document has no contractual validity and may contain omissions, typographical and/or spelling errors, and may therefore be subject to modification and/or updating without notice.

APPENDIX A –Example programs

The DR product supports 4 Fieldbus: Profinet, PowerLink, EthernetIP, EtherCAT. Thus many different PLCs can be used with this product. You can download the following examples.

- Profinet: Tia Portal V16
- Powerlink: *pending*
- EthernetIP: Rockwell
- EtherCAT: Sysmac Studio

The Descriotion files can be found inside the Device Description Folder of our BSI software on the Product Page on your Website.

Mini Motor S.p.a.

via E.Fermi, 5

42011 Bagnolo in Piano (RE), Italy

Tel. +39 0522 951889

Fax. +39 0522 952610

info@minimotor.com

www.minimotor.com